THE REED ORGAN:

ITS DESIGN AND CONSTRUCTION

By H. F. MILNE

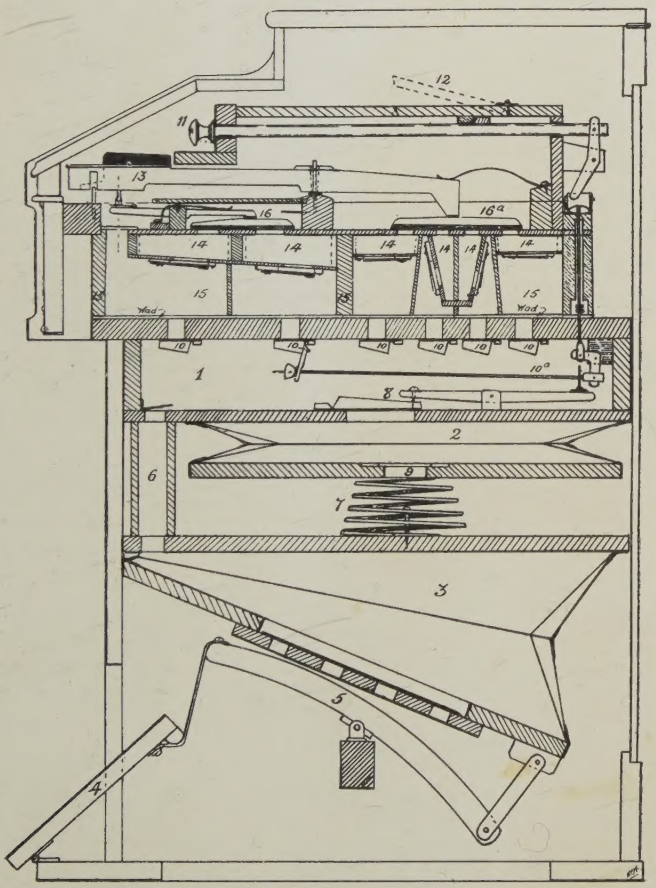

THE ORGAN LITERATURE FOUNDATION
Braintree, Mass. 02184

Digitized by the Internet Archive
in 2025

https://archive.org/details/bwb_S0-BKR-785

The Reed Organ

This book is an unabridged republication of the original and is available from
THE ORGAN LITERATURE FOUNDATION
Braintree, Mass. 02184

The ORGAN LITERATURE FOUNDATION
45 Norfolk Rd. Braintree, MA 02184
Telephone (617) 848-1388
Catalogue Available: $1.00

ML
597
.M5
1930 / 53,723

THE REED ORGAN:

ITS DESIGN AND CONSTRUCTION

A PRACTICAL GUIDE FOR CRAFTSMEN WITH
INSTRUCTIONS FOR MAKING, INCLUDING
CHAPTERS ON TUNING AND VOICING, ETC.

WITH FORTY-TWO FIGURES AND DIAGRAMS BY THE AUTHOR

By H. F. MILNE
(Author of "How to Build a Two Manual Chamber Pipe Organ"

PRICE FIVE SHILLINGS

London:
Published at the Office of MUSICAL OPINION
13, Chichester Rents, Chancery Lane, W.C.2
1930

CAMROSE LUTHERAN COLLEGE
LIBRARY

CONTENTS

	Page
INTRODUCTION	1
THE HARMONIUM	6
THE AMERICAN ORGAN...	10
SELECTING A SPECIFICATION	22
THE SOUND-PRODUCING PARTS	25
THE CONSTRUCTION	37
THE SOUNDBOARD PALLETS	53
THE BELLOWS	57
THE MANUALS, ACTION, &c.	70
THE STOP ACTION	85
PLANNING THE ORGAN	97
THE PEDAL ORGAN	117
COUPLERS, &c.	125
REED VOICING AND REGULATING...	136
TUNING	147
FAULTS AND THEIR REMEDIES	150

INTRODUCTION

ALTHOUGH the means of obtaining musical sounds from vibrating reeds was undoubtedly understood and practised in a primitive fashion in very early times, the reed organ as we know it to-day is, comparatively speaking, a modern invention. Its big brother, the pipe organ, has been in use for several hundred years, but the idea of making a keyboard instrument, the tones of which emanated entirely from metal vibrators, was not an accomplished fact until the beginning of the nineteenth century, when the first reed organ in a practical form was constructed in France by Grenié, who termed it "Orgue Expressif." In the year 1840 Alexandre Debain of Paris took out patents relating to reed instruments, which were manufactured under the name of "Harmonium." These patents covered practically the whole principle of producing musical tones from metal vibrators by forced wind pressure, and became, more or less, the foundation or model for all subsequent forms. Even the word "Harmonium" was protected, thus obliging other and later inventors to bring out their ideas under different names.

A number of improvements were afterwards added to the original invention, as, for instance, the percussion action, the prolongment, the melody attachment, double touch, expression stop, &c., all of which will be referred to more fully later. The

idea thus evolved has since undergone little or no change and harmoniums are to-day manufactured in much their original form.

In view of the prominent position enjoyed by the reed organ amongst musical instruments of the present time, it is somewhat extraordinary that, comparatively speaking, it is so little understood, though possibly this, in a large measure, may be owing to the fact that there is hardly any available literature on the subject. Indeed, apart from articles which have appeared from time to time in various publications, and a few short descriptions in encyclopædias and such-like works of reference, practically nothing of the kind exists.

Judging from the advertisements of well-known makers, thousands of these instruments, in one form or another, must be sold each year, and it is surprising therefore to find so few people who have even the remotest idea as to "how it works." This lack of knowledge exists not only amongst those who actually possess reed organs, but piano tuners and others are often totally unacquainted with its mechanism and are unable to make the smallest repair. In writing this series of articles, therefore, I shall endeavour not only to explain the working of the instrument, together with the cause and remedying of defects, but to give such instructions, accompanied by detailed drawings, as will enable anyone desirous of doing so, to construct a reed organ throughout. I have used the term "anyone," but, of course, it goes without saying that technical ability in the use of wood and metal-working tools is of paramount necessity,—likewise the possession of the tools themselves. In this last respect, however, those such as are usually found in a carpenter's tool chest, with the addition of one or two special appliances will be all that is necessary to execute the work.

Apart from the actual construction it is often necessary to undertake repairs, alterations or adjustments of one kind or another, in existing instruments, and this part of the subject will therefore receive very considerable attention. At the same

time, complete understanding as to the manner in which a thing was originally made is often an invaluable guide in executing repairs. This particularly applies to reed organs, in-as-much as many makers seem to imagine that once finished, their productions will never need repair or adjustment, and instead of making the working parts easily accessible, seal them up in casework with screws and glue in a manner guaranteed to defy the efforts of the most painstaking repairer.

The term "reed organ" broadly covers two separate kinds of instrument, namely, the harmonium and the "American" organ, and the essential difference between them lies in the fact that whereas the harmonium produces tones by means of "force" or pressure bellows which drive compressed air up through the reeds, the American organ draws the air from the normal atmosphere down through the reeds by suction. Thus, there are two distinct types of reed organ, and as they each operate by an entirely different method it will perhaps be as well to give a detailed description of each. Before doing so, however, let us examine more closely the fundamental principle of sound production from reeds.

All reed organs, or to be more correct, "free" reed instruments, produce their tones by means of narrow strips, or tongues, of thin, hard and elastic metal (generally brass), technically known as "vibrators." These are each set in a separate metal frame furnished with a rectangular aperture above which the tongue (which is slightly smaller) is fastened by one end so that when in movement, the unattached end is free to oscillate into and out of the aperture in the frame without touching at any point. Thus they are termed "free" reeds as distinct from the "beating" type of reed universally employed in the pipe organ.

A current of air produced either by "force,"—i.e., under pressure, or by suction, is then driven against the free end of the tongue, which is at once set in periodic motion and made to swing, or vibrate, to a greater or less degree according to the

elasticity of the metal employed. Fig. 1 shows this piece of mechanism at rest. In this state the aperture in the frame is practically closed by the tongue, but as soon as the air current strikes its unattached end the tongue is forced up into the

Figure 1. American Organ Reed

position shown in Fig. 2 (*a*), so permitting the air stream to escape

Figure 2. Reed in Action

through the aperture as indicated by the arrows. A certain limit having been reached in this upward direction the natural elasticity of the metal forces the tongue back to, and past, its position of equilibrium, so that at the moment it actually passes through its point of rest towards the position shown in (*b*) the current of air is barred or shut off by the accuracy with which the tongue fits the aperture beneath it.

The limit of oscillation having been reached in a downward direction, the air current overcomes the resistance of the tongue and again forces it upward, so that the aperture is once more uncovered and the air current able to resume its passage.

As long as a sufficient current of air is driven against the tongue this cycle of oscillation continues, with the result that a series of equal dis-continuous impulses or puffs of air are discharged at regular intervals of time. The immediate effect of this succession of vibrations by which the aperture is alternately

opened and closed with great rapidity is to create a musical sound. The resultant note is a highly composite clang containing a large series of overtones (up to the sixteenth or more being recognisable) so that the free reed does not require a resonating column to enable it to produce a musical sound. Unfortunately, the particular kind of interrupted impulse which produces these sounds has to a maximum degree the tendency to create an excessive development of the higher dissonant overtones which by more or less smothering the fundamental or prime cause the harshness and peculiar snarling quality of tone characteristic of the reed organ.

Each note in the compass has a separate and independent reed, the pitch of the sound varying according to the length (or, to be more exact, to cover the case of "loaded" tongues) upon the radius of oscillation and the thickness and weight of the vibrating tongues,—width having practically no influence.

The velocity of vibration, of course, increases as the pitch ascends, so that whereas a large tongue sounding say, the CCCC note, 32ft. pitch, gives only sixteen vibrations per second, a high note may be making several thousand per second.

Wind pressure, provided there is sufficient to start the vibrations, has for all practical purposes no perceptible influence whatever on the pitch of the reeds, which, once tuned, remain constant, whether lightly or heavily winded. Wind pressure does, however, very largely govern the power and incidentally the *timbre* of the instrument, as we shall presently see when we come to discuss the actual form and scaling of the reeds.

THE HARMONIUM

TURNING now from the sound producing to the mechanical parts of the instrument we find that in this respect very considerable differences exist between the harmonium and the American organ, and we will therefore first consider the harmonium.

The reeds of the harmonium are sounded by compressed air generated by "force" or pressure bellows, and a glance at Fig. 3 will show how this is accomplished. When at rest the feeders A are in an open position and full of air which enters through the non-return valves B. Immediately the foot pedals are pressed down the feeders close, and in doing so force the wind within up the wind trunks C into an air chamber called the windchest D, from which it is prevented from returning to the feeders by the flap-valves I. This windchest is in direct communication with a single acting reservoir E by means of the valve F, and the reservoir through the agency of strong springs G has the effect of equalising the wind pressure admitted to the reeds. To prevent over-blowing, the reservoir is fitted with a discharge or safety valve H in the bottom board, so that immediately the predetermined wind pressure is exceeded the valve comes into operation and allows the excess wind to escape.

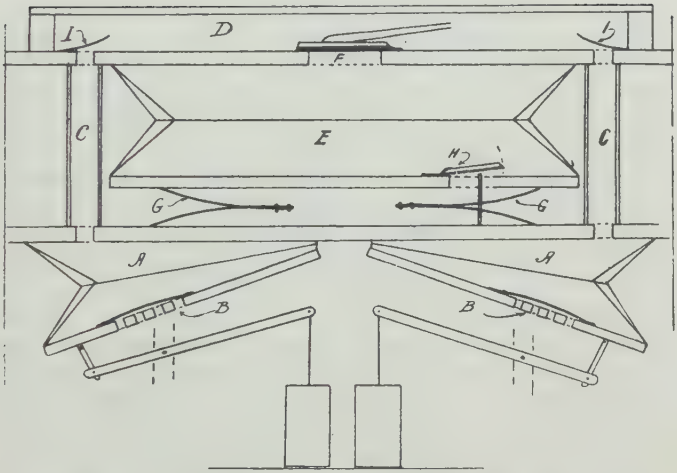

Figure 3. SECTION OF HARMONIUM BELLOWS, &c.

The valve F admitting air to the reservoir from the windchest may, however, be closed at will (as in the diagram) by a drawstop labelled "expression" and when this is in operation the compressed air is delivered direct from the feeders to the "reed pan" or soundboard so that the influence of the reservoir is no longer felt, thus enabling the reeds to be either strongly or lightly winded, according to whether a *fortissimo* or *piano* effect is required. The character of the instrument is thereby immediately and entirely changed from a purely mechanical to an expressive one, the volume of tone being completely under the control of an experienced performer.

Above the windchest is the soundboard or reed pan carrying the reeds or vibrators, and above each reed is a channel cut in the soundboard and forming a small air chamber or cavity, the shape and capacity of which has considerable bearing on the quality of tone of the note t influences. The reeds are arranged

in rows upon the soundboard, there being from one to four, or more, rows according to the size of the instrument. Each row is controlled by a drawstop, or drawstops, bearing the names of the different registers and admitting, when drawn, the wind from the windchest. The cavities or cells above the reeds are normally closed by small valves termed "pallets," each of which is connected by suitable action work to a corresponding key so that immediately the key is depressed the pallet opens, causing the reed (of any stop which may be drawn) to speak.

The compass of the harmonium is from CC to C in alt., sixty-one notes or five octaves,—i.e., from C below the bass stave to second C above the treble. Each row of reeds is generally divided into bass and treble compartments of two-and-a-half octaves each, the treble commencing on F in the first space of the treble stave. Each of these compartments is controlled by a separate drawstop, so that in an instrument with four rows of vibrators the reed compartments would be eight in number (four bass and four treble) of three different pitches,—viz., unison (8ft.), octave (4ft.) and double octave (16ft.).

The front bass and treble rows are the diapason of 8ft. pitch and the bourdon of 16ft. These are the foundation stops and are known as the "front organ." That which is termed the "back organ" has solo stops, as for instance, the oboe (treble) 8ft., and bassoon (bass) 16ft., and the principal of 4ft. The stops in the back organ are covered by a swell box which is also divided into *fortes* corresponding with the bass and treble divisions of the registers. These *fortes* are operated by knee swells, while the whole of the registers may be combined by a stop or knee lever termed "full organ." The harmonium is not, of course, restricted to one manual, and there are a number of models by well known Continental makers having two or three manuals and pedal board, and built more or less upon the lines and measurements of the pipe organ console.

In addition to the "speaking" stops a number of mechanical contrivances are in general use, including the Percussion Action,

which consists of a small hammer and escapement acting upon the reeds of the diapason at the instant air is admitted to them and by starting the vibrations gives more prompt speech. The Prolongment, an arrangement whereby selected notes can be sustained after the fingers have left the keys. Both this and the percussion action were first introduced by a workman named Martin, employed by the Alexandres of Paris. Dawes's Melody Attachment, by which in certain registers prominence is given to an air or treble part by shutting off all notes below it. The idea is also applied to the bass as a "pedal substitute" to take the place of the pedal clavier, but in this case it is the lowest note which is accentuated. The Double Expression, a pneumatic balance in the wind reservoir for exactly maintaining by gradation equal pressure of the wind. The Double Touch as used in the harmonium and American organ is an invention of a Mr. Tamplin, an English professor of music, for giving prominence or accentuation to certain parts by causing the back organ stops to speak sooner than those of the front, the latter being called upon by deeper pressure of the key. The Sourdine, an arrangement (now practically obsolete) whereby the supply of wind is diminished by controlling its admission to the reeds for the purpose of soft effects, and the Tremolo, an apparatus which by disturbing the wind in the vicinity of the treble reeds, gives a wavy effect.

In general, the tone of the harmonium has considerable power but is often inclined to be harsh and reedy in *timbre*. The tongues of the reeds are larger and broader and less twisted or curved than those of the American organ, and also more nearly fit the aperture in the frame, thus producing a louder quality of tone. As a musical instrument, however, the harmonium has far more power of expression than its rival the American organ, and of the two is often preferred by those who understand the correct use of the expression stop.

THE AMERICAN ORGAN

UNLIKE the harmonium, the American organ acts by wind exhaustion; for although bellows worked by foot pedals are employed, they do not generate compressed air, but serve to create a vacuum in the air chest or chamber, and the air is thereby sucked down through the reeds.

The so-called "American" organ is a somewhat mis-applied term, in-as-much as the idea of sounding reeds by suction originated in general principle with the Alexandres of Paris, who constructed a few instruments of this description about 1835. The idea was subsequently taken to America, and Messrs. Mason & Hamlin, of Boston, were, I believe, the first to produce the suction organ there, about 1860, when it was known as the "Melodia."

Fig. 4 shows the air exhausting apparatus in section, and it will be noticed that the valves are on the outside and not inside as in the harmonium. The action is then as follows. When at rest the exhauster or reservoir A is held open by the spring B, and is filled with air at normal pressure, whilst the two exhaust lifters C (sometimes mis-termed "feeder") lie folded close to the "middle board" D by the pressure of the springs E. The "back board" is hinged at F, but the middle board is a fixture

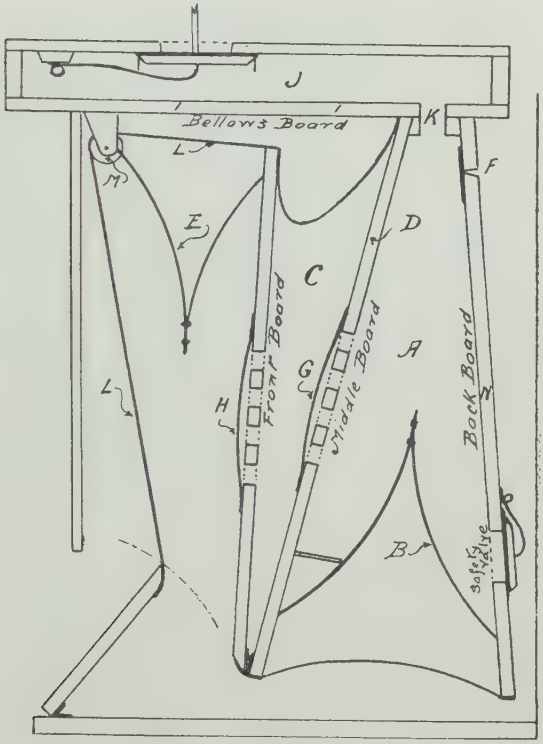

Figure 4. SECTION OF AMERICAN ORGAN EXHAUSTER, &c.

and is fitted with a pair of non-return valves communicating with the lifters at G, similar valves being fitted outside the lifters at H. Immediately above the bellows board I is an air chamber J communicating with the reservoir through the aperture K. This air chest extends practically the full length and width of the organ case, and upon its upper surface, or the "soundboard" as

it is termed, is placed the "cavity board" holding the reeds, together with the pallets, stop action, &c. Each row of sixty-one reeds constitutes a stop, or when divided into bass and treble two stops, wherein the reeds lie side by side in chromatic order, each in a separate cell in the cavity board. Each cell is exactly over a narrow oblong aperture or slit morticed through the soundboard and sealed by a moveable valve or pallet working on guide pins upon the under-side of the soundboard by means of short rods or plungers connected with the keys. The open ends of the reed cells are closed by long narrow valves, termed mutes, which are connected with the drawstops, so that until one or more stops are drawn no air current can pass through the reeds. If the foot pedal be now pressed down the lifter opens by means of the webbing connections L working over the roller M and in so doing draws the air from within the reservoir and the air chest through the non-return valve G. The vacuum thus created in the reservoir allows the pressure of the outer atmosphere to overcome the power of the springs B, causing the back board to close in upon the middle board.

A stop being drawn and a key pressed down, the pallet opens and direct communication is thereby established between the air chest through the reed cell to the atmosphere, which by reason of its greater pressure rushes in to fill the vacuum in the air chest and sounding the reed for as long as the key is depressed and the vacuum maintained.

The compass of the American organ usually extends from FFF to F^8, five octaves or sixty-one notes, each row of which is generally divided into bass and treble and constitutes two "sets," the treble portion covering three octaves and the bass two. The instruments vary considerably in size and quality according to the number of rows of vibrators, which may be anything from one or one-and-a-half to six or more, whilst a large number of models are built with two manuals both with and without a separate pedal board. The solo stops are then found upon the upper manual, forming what is really the swell organ. There is

no expression stop as in the harmonium and its place is taken by the automatic swell. The reed tongues are much more slender, curved and twisted than those of the harmonium, and do not fit their frames so closely, which are also made differently with a kind of spoon shape hollow on the underside to give promptness of speech. The tone is softer and more mellow than that of the harmonium and is frequently aided by the use of resonators termed "qualifying tubes." These resonators may take the form of additional cells placed above and communicating with the reed cells proper, or as separate pine wood pipes or tubes ranging from 2ft. to 2in. in length and placed horizontally or vertically at the back of the case, where they act upon the diapason row.

A typical specification for an instrument having four full rows of vibrators would be:—

Diapason (treble and bass)	8ft. pitch
Dulcet (mechanical stop, soft effect upon above)	
Melodia (treble and bass)	8ft. „
Bourdon (treble and bass)	16ft. „
Principal (treble, three octaves)	4ft. „
Piccolo (bass, two octaves)...	2ft. „

In addition to these there would probably be a number of mechanical stops such as an octave coupler, sub-octave coupler, forte stops labelled "treble forte," "bass forte," &c., and the vox humana, which last is a cardboard fan for giving an undulating effect to the treble octaves.

Where there is a pedal board, independent stops of thirty or thirty-two vibrators of 8ft. and 16ft. are placed in a separate cavity board below the bellows, but in instruments where this does not exist an extra octave of 16ft. reeds labelled "sub-bass" is sometimes found upon the manuals. In some organs there is an arrangement used in conjunction with these bass reeds whereby a note in the lowest octave remains down although the finger be withdrawn until another note in the same octave is depressed, thus giving the effect of a pedal point.

All instruments, whether large or small, are fitted with one or two knee levers, one giving full organ by bringing on such stops as may not already be drawn, and the other operating the swell.

The foregoing description of the harmonium and American organ give only a very brief outline of the general character of these instruments in their simplest form. An improved type of reed organ is now in existence, and of this I shall have more to say later on, and in the succeeding chapters dealing with the various sections, endeavour to clearly describe and illustrate every part of its construction.

It is to be regretted that in the past manufacturers of the reed organ (and especially the American organ) have bestowed too much attention upon the case work, and cost and labour have been expended on unsightly imitation "pipe-tops" which might very well have been otherwise put to the improvement of the sound-producing and other important parts. Instead, rather than cut down this unnecessary top hamper, the tonal qualities have been so frequently made to suffer until what with dummy stops, few and sometimes faulty reeds and incomplete registers, the reed organ has, to a large extent, fallen very low in the estimation of critical musicians. Some of the best makers are now giving their attention to the production of instruments in which these faults are eradicated to their very great improvement. Much yet remains to be done, however, and one would like to see, if possible, some very considerable reduction in price; for although undoubtedly overhead and material charges are now high, the cost of one of these better-class reed organs puts them out of reach of any who are not comparatively well-to-do. So much so, indeed, that although the reed instrument is frequently advocated as a substitute for the pipe organ it is possible to get the real thing for less money.

Speaking of reeds as a substitute for pipes brings us to the consideration of how far it is possible for this to be. The habit of regarding the reed organ as a makeshift in place of the pipe organ has not had the best effect on its proper use. Few players trouble to master the mechanical difficulties, nor do they study it as a musical instrument possessing its own particular qualities. Yet the harmonium with the expression stop properly used by an accomplished performer is capable of considerable artistic treatment. If, however, we look to the reed instrument to equal the pipe organ in tone, power and quality, it is to be feared we are doomed to a certain amount of disappointment, at all events, in a large building. Reeds lack the carrying power and peculiar *timbre* associated with true pipe tone (especially diapason tone), and it has so far been found impossible to obtain that rich flood of ringing sound which is associated with the pipe organ at its best. Nor is this so very extraordinary when we consider the enormous difference between an organ pipe and the tiny metal tongue sounding the same note. The wonder of it is that the reeds can be made to give such pipe-like quality at all, and great praise is therefore due to those builders who by their artistry in voicing have given the reed organ a new meaning.

In the confined space of small buildings or music rooms the reed organ has a good deal in its favour; it is smaller and more compact; can be moved with greater facility and without dismantling; and that the tone *can* be satisfactory is proved by some of the examples now on the market. The full organ is certainly heard to greater advantage *as a whole*, and the possibility of being able to employ stops of 16ft. pitch on the manuals is a great consideration, in-as-much as registers of this description are practically barred from the small pipe organ either by the cost of the pipes or want of accommodation. I am speaking more particularly in regard to organs for use in a private house or for filling in the small orchestra for which purpose it would seem the majority of reed organs are primarily intended.

Therefore, the conclusion on reeds as a substitute for pipes would appear to be that whereas in a large building they cannot possibly be compared with or create the same effect as pipes, yet as a means of performing legitimate organ music either as a practice instrument for the professional organist, as a unit for the small orchestra, or for home use, they have decided recommendations. To meet the requirement of these several uses, some discrimination is necessary to get the most suitable kind of instrument for the purpose intended, although to a large extent this selection is limited by the method of manufacturing by a system of mass production.

For the more universal type of instrument, makers turn out actions with from one to four or more rows of reeds, each type of which is subsequently built into a number of different styles of case, so that exactly the same tonal scheme may appear in variously priced instruments; and, although this may be a very good business proposition, it is not conducive to the most satisfactory results from any other point of view.

Taking the ordinary single keyboard instrument as an example, the specification will perhaps comprise four complete rows of vibrators, and these will be acted upon by as many as three times the number of draw stops, the majority of which must therefore be either mechanical or more or less useless dummies.

Reed organs are frequently described as being of so many stops, rows or sets; but each of these terms is equally confusing unless the actual number of vibrators is known, because a "set" or "stop" in catalogue parlance may simply mean one or two octaves, and not a complete row of sixty-one notes. In fact, many stops have no actual reeds of their own. Thus, it is not uncommon to find the diapason row divided into bass and treble, each part of which, in addition to its own stops, is acted upon by others labelled "Dolce," and sometimes even by a third stop called "Dulciana" or some other name. When three or four rows are treated in a like manner it makes a fine show of draw-

stops, but the weak point about it is that when all these stops are drawn nothing whatever is added beyond the four original rows, which explains why the general ensemble of the average American organ is so thin and unsatisfactory.

Even the nomenclature used on the stop knobs is often misleading, so that melodia 8ft., and dolce 8ft. may be simply one and the same thing,—i.e., a soft effect on the diapason row. Stops of this description which give their effects by half opening the mutes of other stops, simply soften the volume of sound and do not in any way alter the tonal character of the reeds acted upon, and therefore add nothing to the "build-up" of the full organ. Intending purchasers of the reed organ will do well to bear this in mind and reject any instrument in which many stop knobs do not justify their existence.

One difficulty in deciding upon a really effective specification for a single keyboard lies in the fact that it has to be regarded more or less in the light of two separate manuals, for which purpose it has been the custom to divide the rows into bass and treble as previously described, so as to enable a soft accompaniment to be played on either half.

A point that should not be overlooked is that purchasers are themselves often to blame for the shortcomings which are met with in this type of instrument, because, as often as not, the tonal scheme is quite a secondary consideration compared with the outward appearance of the casework, and the number of drawstops obtainable for a given sum.

With two manuals a decided advantage is gained over the single keyboard, and instruments thus provided have resources otherwise quite unobtainable. The lower manual is termed the great organ, and the upper the swell organ. The object of the two keyboards is not necessarily to increase the number of registers or stops, but to enable a melody on one to be suitably accompanied on the other; to give a pleasing combination of stops and a telling ensemble when all are drawn and the manuals used in conjunction, or as it is termed, "coupled" together.

In an organ of this description there is not the least necessity for the stops to be divided, yet in many models we find this being done with the same multiplication of stop knobs,—in fact, simply two single keyboards in one case.

Two manual instruments are sometimes fitted with an independent pedal organ and pedal board, though in the average American organ (both single and two manual) it is more usual to find a substitute for the pedal department supplied by an additional octave of reeds of 16ft. pitch termed sub-bass. This arrangement does in a measure augment the bass, but in another way is bad because the thirteenth note up is doubled whilst all others are single, and the change is noticeable in passages where the melody crosses this key. A soft 16ft. stop running through the lowest thirty or thirty-two notes is much better, and more useful than the single octave of thirteen notes.

With regard to the most desirable compass for the manuals of the reed organ, it may be said that the FF to F five octaves now universally employed in the American organ is a fairly suitable one for the single keyboard without pedals. At the same time it does not, of course, agree with the compass of pipe organ manuals, which without exception, now begin on the note CC. Many years ago, when organs were frequently unprovided with any proper pedal department, a few notes were sometimes added to the manuals below CC, but these have long since been discarded and all notes below CC are now relegated to the pedal organ.

The compass of the harmonium invariably ranges from CC to C (five octaves) whether the instrument has a separate pedal board or not, and as there is an ever increasing tendency on the part of reed organ makers to follow the standards already employed for the pipe organ, together with the fact that the additional notes at the top of the keyboard are more frequently required, not only in playing, but to give greater efficiency to the octave couplers, it would appear that the CC keyboard is the most generally useful, and one that should be universally adopted.

The compass of the pedal organ ordinarily has a range of thirty notes, from CCC to F, and whilst never less than this, it is better (when the manuals are five full octaves) that the pedal board be extended from CCC to G (thirty-two notes).

For the benefit of readers who are unacquainted with the terms used in connection with organs and organ building the position of these various C's ought perhaps to be briefly explained as follows. The method of describing the pitch of a given note is the same for both the reed and the pipe organ, from which it is derived. Taking as a starting point the note CC (the lowest manual key of the modern pipe organ), we find that to produce this note (which sounds one octave above the lowest C on the pianoforte, or two ledger lines below the bass stave) requires an open organ pipe approximately 8ft. in length, and which is therefore said to be of "8ft." pitch. This term is also applied to the whole stop, even though it may not be carried through the compass down to CC, because if so carried down it would require a pipe 8ft. long to sound the lowest note. Stops of 8ft. pitch are also termed "unison" stops, and are the foundation upon which all organ tone is built up.

It must not be supposed, however, that all pipes or reeds speaking on the note CC are of unison pitch, as in addition to the 8ft. registers there are 4ft. stops (requiring an open pipe 4ft. in length at CC) sounding one octave above; 2ft. stops, two octaves above; 16ft. stops, one octave below; and 32ft. stops, two octaves below the unison. These stops are so arranged upon the soundboard that on pressing down a single key with several stops drawn we hear not one only, but a series of tones, each so many octaves apart. The full series of C's upon the organ are:—

CCCC,	32ft.	The lowest note on the organ
CCC,	16ft.	The lowest pedal key, and equivalent to the lowest pianoforte C
CC,	8ft.	The lowest organ manual key
Tenor C,	4ft.	
Middle C,	2ft.	Also termed C 1
Treble C,	1ft.	" " C 2
C in alt,	6in.	" " C 3
Top C,	3in.	" " C 4

Thus it will be seen that the "tone length" halves each octave above, and it makes no difference that we are concerned with reeds and not pipes,—the principle is applied in exactly the same manner. The five octaves on the manuals commencing with the different C's are likewise termed bass, tenor, middle, treble and top respectively.

When everything is considered it is at once apparent that the ordinary factory-made American organ is lacking in every detail usually associated with the pipe organ, and is therefore unsuited as a medium for practice by anyone who aspires to master the technique of that instrument.

In recent years an increasing number of well known firms have recognised these deficiencies and are making determined efforts to introduce a more thoroughly efficient type of reed organ. In the best of these the divided stops are entirely eliminated, as well as unnecessary drawstops, &c. The various registers are of good tone, well voiced and run through the full compass, the manuals, pedal boards, &c., are planned on pipe organ lines. The case work is generally quite plain and serviceable, and constitutes all that is required. Obviously therefore, to obtain the most generally useful and satisfactory type, the modern reed organ must develop along very definite lines, and as most of the improvements already effected have been carried out in accordance with pipe organ usage, there is every practical reason why they should continue to do so.

With this idea in mind, the more important details and requirements for an up-to-date reed instrument may be summarised as follows:—

When possible, the organ to comprise not less than two manuals (great and swell) with keys of correct overhanging pattern.

The compass to be sixty-one notes for CC to C in alt, five octaves (single manuals included).

All registers (whether on one or two manuals) to run through the full range of sixty-one notes, and all divided stops except

such as are usually discontinued below tenor C, to be omitted.

The drawstops to be placed in vertical jambs, preferably set at an angle of 45°, the stops for swell organ and couplers to be on the left and those of the great and pedal organs on the right hand.

All mechanical stops other than legitimate couplers, &c., to be omitted or reduced to a minimum and all couplers to run through.

The reeds or vibrators to be of good scale, full, round and mellow pipe-like tone, prompt in speech and voiced to represent as nearly as possible the different shades of organ tone,—i.e., diapason, flute, string and reed.

An efficient swell to be provided with balanced swell pedal.

The pedal board to be concave and radiating with a compass of thirty or thirty-two notes CCC to F or G as required, and all measurements of the pedal board and for the disposition of the various parts of the console to be in accordance with pipe organ standards.

The bellows to be of ample size to ensure an adequate supply of wind for the full organ.

This concludes what may be termed a general survey of requirements, and the actual construction may now be dealt with.

SELECTING A SPECIFICATION

BEFORE commencing to build it will be necessary to decide upon a definite plan and to draw up a specification of the stops it is intended to use, and as the reeds will have to be purchased this is largely a matter of personal choice and cost.

The smallest instrument that could be serviceably made would contain only one row of vibrators, and this should be a unison stop,—say diapason 8ft. pitch. After this any number of stops may be added, always, of course, with due regard to balance of tone. On the manuals, 8ft. tone should predominate, and with only a small number of registers one 4ft. stop will be quite sufficient on each manual to add variety and brilliance. The undue prominence of the upper harmonics in free reeds make it desirable that 16ft. tone be included very early in the scheme; and, although not absolutely necessary, it is best to have one such stop on each manual, or failing this, on the swell. 2ft. stops are also frequently employed, but mixtures are not required, or necessary in reed organs.

Where there are two manuals, good foundation tone should be the main feature of the great, a soft stop being added for accompaniment purposes. The swell organ will then comprise a

selection of solo registers, whilst to the pedal organ are allotted the major bass stops of 16ft. pitch, with, perhaps, one of 8ft. to add firmness. In a single manual organ the stops will necessarily be an admixture of foundation and solo registers; but, even so, foundation tone should be given first place, because, however beautiful a fancy stop may be, it soon palls if constantly used.

The power of the instrument also requires consideration, and some care is needed in this respect, for whereas a single reed may not create much sound by itself, when several stops are drawn the result may be overpowering in a small room.

As I have previously said, mechanical stops and couplers should be reduced to a minimum, and in all cases couplers should run through. In a small specification it may be sometimes necessary (without adding more reeds) to obtain a soft effect on some more powerful stop, and in such case the soft stop is said to be "derived." Such an arrangement, however, must be regarded purely as a convenience not to be abused, and it will be quite sufficient if one stop is thus acted upon when the manual concerned does not otherwise contain a stop of quiet character.

By obtaining the price lists of a number of firms who supply the vibrators (which, by the way, can be procured either voiced and tuned, or not, as desired), a selection can be made to suit individual taste and requirement. As a guide to the arranging of a satisfactory tonal scheme, I append two suggested specifications suitable for a single and a two manual organ, as well as one for a harmonium, with the usual divided stops. These may not meet the requirements of everyone, and whilst the organ to be described will be built in accordance with scheme No. 1, it rests with the builder to alter it in any way which suits him best. For instance, if more power is required a trumpet or clarion stop might be added to the great in the two manual organ, or for a smaller instrument the stops could be reduced to two rows on the great, and three on the swell.

Scheme No. 1

Two Manuals and Pedals

Manuals CC to C in alt ... ... 61 notes
Pedal CCC to G ... ... 32 notes

GREAT

Open diapason	8ft.
Clarabella...	8ft.
Stop diapason or Dulciana (derived from diap.)	8ft.
Principal	4ft.

SWELL

Double diapason	16ft.
Gamba	8ft.
Oboe or ... ... Horn	8ft.
Gemshorn or ... ... Flute	4ft.

PEDAL

Open diapason	16ft.
Bourdon (soft) derived from Diapason	16ft.
Bass flute...	8ft.

COUPLERS, &c.

Swell to great
Great to pedal
Swell to pedal
Balanced swell pedal, &c.

Scheme No. 2

Manual CC to C in alt ... ... 61 notes

Double diapason	16ft.
Open diapason	8ft.
Dulciana or Salicional (soft on diapason if desired) ...	8ft.
Principal, Flute or Gemshorn	4ft.
Gamba, Oboe or Trumpet...	8ft.

Octave coupler
Pedal as in No. 1 if required

Scheme No. 3: Harmonium

Manual CC to C, 4 full rows of 61 notes

FRONT ORGAN

Bass	*Treble*	
(1) Cor anglais	(1) Flute	8ft.
(2) Bourdon	(2) Clarinette	16ft.

BACK ORGAN

(3) Clarion	(3) Fife	4ft.
(4) Bassoon	(4) Hautbois	8ft.

Bass and Treble Fortes
Tremolo, Expression

THE SOUND-PRODUCING PARTS

ALTHOUGH, strictly speaking, the reeds or vibrators constitute the actual sounding parts of the organ, the various portions of the structure immediately surrounding and connected with them are of such nature and importance as to warrant their inclusion and description under this heading.

Having settled upon the stops it is intended to use, we must make up our minds whether they are to be sounded by pressure or by suction wind. Either method may be employed, each having certain advantages; but as the mechanism and setting of the reeds for the one system is entirely different to that of the other, this point must be decided at the outset.

Generally speaking, it may be said that pressure wind gives greater power, as it permits the use of a larger and altogether bolder type of reed than is usually found in the suction organ. It also enables the expression stop to be fitted. On the other hand, suction wind gives a softer, more mellow and organ-like tone, and is the system now almost universally favoured for commercial reed organs other than the harmonium proper. By its use a loud stop may be "muted" into a softer one,—a facility sometimes of considerable advantage. The reeds are less costly than those of the harmonium type, and although

the expression stop cannot be applied to the suction organ, the difficulty is easily overcome by the provision of a well made swell box.

THE REEDS

The theory of the working of the free reed has already been fully illustrated and explained in a previous chapter, and therefore it is unnecessary to revert to that part of the subject here. As, however, it will probably be necessary for anyone building the organ to purchase the reeds, a few notes likely to be of service when so doing will not, perhaps, be out of place.

It may be said at once that unless the builder is skilled in reed voicing it will be most advisable for him to obtain them in a finished condition ready for the instrument. The reeds may, of course, be bought unvoiced and tuned if desired, but although later on I shall endeavour to go into these matters as explicitly as possible, the art of voicing a complete stop is of such difficulty that it is better to get this part of the business done when ordering the reeds. The difference in cost is comparatively small, and in any case the result is very different from anything the amateur can hope to accomplish in the absence of the special knowledge required. All 16ft., 8ft., 4ft., and 2ft. stops of both American organ and harmonium reeds are obtainable in various patterns, and are sold either for what is termed FF scale or CC scale. For the specification in Schemes Nos. 1 and 2, we shall want the CC scale reeds, each stop or set to be of five complete octaves or sixty-one notes.

The tone of different makes of reeds varies considerably, and frequently are far from imitative of their prototype, so that if possible it is as well to hear similar stops before purchasing.

One of the first points with which we are concerned is the scale. The term "scale" signifies the breadth of the tongue in relation to its length; and, as the quality of the tone is modified by the breadth of the tongue, it is important that the reeds be

of a fair and suitable scale. In this respect, free reeds follow the same law as organ pipes, and, for the same reason that a pipe required to give a bold and sonorous tone must be of large scale, so for a like purpose must the reed be fitted with a broad tongue. Stops of the diapason class are therefore always best when furnished with tongues of wide scale,— say, about one quarter their vibrating length in width.

No universal or standard rule appears to be observed in the manufacture of the reeds, and different makers favour different scales, so that in one foundation stop the 8ft. CC reed may be more than $\frac{1}{2}$in. in width, in another it may be only $\frac{1}{4}$in. or $\frac{3}{16}$ in. In such case the wider tongue would, if properly voiced, give a rounder, fuller, and more organ-like tone.

Unless skilfully voiced, large scale reeds tend to slowness of speech, whereas long and narrow ones are quick. A narrow tongue favours a thin and more penetrating sound, so that an organ having all its stops composed of reeds of this formation would probably be harsh and strident in tone, and there is little doubt that the extreme harshness frequently exhibited by the cheaper class of reed organ is largely due to the disproportionate length of the vibrators.

Narrow scales are, of course, very useful and necessary in certain registers from which a thin and keen tone is required, but the diapason or other foundation stops should, without exception, be composed of broad full toned reeds.

The length of the tongue varies with the pitch of the note, and also by reason of its being sometimes made to a uniform thickness throughout or at others "loaded" either by means of a small weight affixed to the free end or by a thickening of the tongue itself. The pitch of the sound is entirely governed by the number of vibrations made by a reed in a given space of time, and as loading or thickening the free end of the tongue slows or retards this action, a deeper note is thus obtainable from a reed of given length than is possible when the tongue is of uniform thickness.

Not only are harmonium reeds larger and more robust than those of the suction organ, but they are also set in a different type of frame or block. The frames of the American organ reeds are always "dished" out on the underside, whereas those for the harmonium are left square. The technical reason for this will be explained in due course, but at the moment it is sufficient to say that the harmonium type of reed is the more powerful and better suited to the heavier wind pressure generated by the force bellows used in that instrument.

The tone of the reeds should be imitative and characteristic of the quality they represent. All too frequently we find stops labelled with imposing names which upon trial sound as unlike that particular tone quality as it is possible to imagine. Good contrast between the various registers of a specification is also a vital point which seldom receives the attention it deserves.

In every organ 8ft. tone should predominate. The 4ft. registers should, unless of some particular fancy quality, be voiced and toned to reinforce the unison stops, without being too loud or shrill. The 4ft. principal on the great ought to receive particular attention in this respect, as it is intended, not as a solo register, but to amplify the tone of the open diapason on the same manual. 16ft. stops or "doubles" should be kept soft and quiet, and the same applies to the bass octaves of the unison ranks, which otherwise tend to overpower the trebles, more particularly when pressure wind is employed.

SOUNDBOARDS

The type of soundboard required to carry the reeds will, of course, depend entirely upon whether they are to be sounded by pressure or suction wind. As either may be used equally well for Schemes Nos. 1 and 2, I shall describe in detail the various parts of the mechanism as applied to both systems: so that those who have a preference for one or the other may be able to build accordingly.

Taking the American organ type first, in which the reeds are sounded by a current of air drawn through them from the outer atmosphere.

If we examine the orthodox type of suction organ, we shall find that each sounding stop or register consists of a row of separate cells or channels hollowed out in a long tapered strip of pinewood. These cells, each containing one reed, are arranged closely side by side in chromatic order through the compass of the instrument and are collectively termed

THE CAVITY BOARD

Fig. 5 represents a cross section of one of these cells, from which it will be seen that it consists of a hollow chamber just large enough in plan to contain the reed when inserted in the narrow groove cut to receive it, round the lower edge of the walls and back. American organ reeds have their frames purposely made to a uniform thickness along the outer edges in order to allow them to slide tightly into these grooves and making, when pushed com-

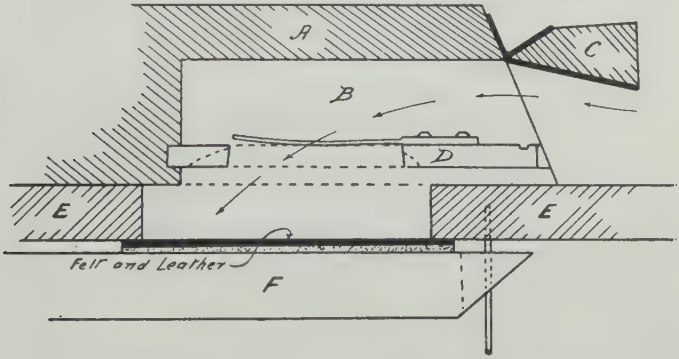

Figure 5. Cross Section of a Cell

A	*Cavity Board*	*C*	*Mute*	*E*	*Soundboard*
B	*Reed Cell*	*D*	*Reed*	*F*	*Pallet*

pletely home, a perfectly airtight joint, so that any air drawn in through the open end of the cell can only escape by passing through the reed aperture as indicated by the arrows in the diagram, Fig. 5. When required, the reed is withdrawn from the cell by means of a small tool termed a "reed hook," for which purpose a notch is milled in the end of the reed frame, as shown in Fig. 1.

In actual construction the cavity board comprises a tapered strip of pine about $\frac{13}{16}$in. or $\frac{7}{8}$in. thick, in which the cells are machined out, or as it is termed "spindled" out, with precision tools and with a degree of accuracy impossible to attain by hand. The cells vary in size,—the *length* always exactly corresponding to the measure of the reed frames and thus gradually decreasing from bass to treble. The *width* is to a considerable extent restricted mainly owing to the necessity of getting each reed under its respective key on the manual. The reed frames are made to exactly the same gauge throughout the entire stop of sixty-one notes, and the cells follow a similar rule from top C down to the lowest twenty-four notes. To get an increased width of cell for these larger reeds the walls dividing them are frequently made slightly concave. Both types of cell are illustrated in the front elevation, Fig. 6.

In *height* the cells range from about $\frac{3}{8}$in. in the bass to about $\frac{1}{2}$in. in the treble, the decrease being usually made by a very slight step at each of the two lowest octaves, after which they are often of a uniform height. Theoretically the greater the height of the reed cell, the better and rounder the tone, but actually this height is limited in instruments of more than one or two stops mainly by reason of the practice of planting the cavity or tube boards of the several registers one above the other, and the consequent necessity of keeping the upper rows of reeds as near their wind as possible.

Makers supply cavity boards for from one to six or more stops, and anyone desirous of using this piece of apparatus will be well advised to purchase it with the reeds.

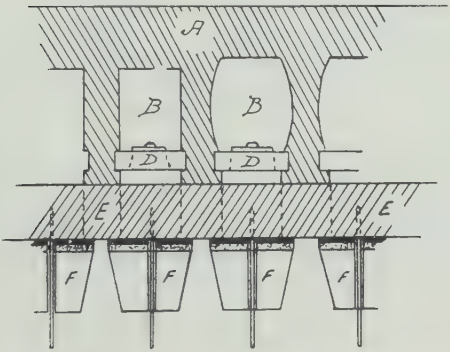

Figure 6. Front Elevation of Cavity Board

Where more than two rows of reeds are required, it is usual for the tube or cavity boards to be arranged one above the other, and in a six-stop board the 16ft. stops would occupy the top, those of 8ft. the second stage, and the 2ft. and 4ft. stops the bottom.

The whole is carefully glued down on to a slab of $\frac{3}{8}$in. pine (termed the "soundboard"), so as to completely cover in the underside of the reed cells leaving only the front ends open to the atmosphere.

A narrow slot or mortice about $\frac{5}{16}$in. wide is cut through the soundboard immediately under and communicating with each reed cell. These slots, known as the "pallet holes," are of a uniform length and width throughout the compass, and are closed on the underside by a moveable valve or "pallet," as shown at (F) in Figs. 5 and 6. The open ends of each row of cells is covered by a hinged wooden bar or valve termed a "mute" (C), which is opened and closed at will by a drawstop.

The action within the reed cell is then as follows. Supposing the stop to be drawn, or in the "on" position, the mute (C), will be raised as shown, leaving the ends of the reed cells open.

Immediately a key is pressed down, the pallet (F) opens and the air current is then free to take the course indicated by the arrows and passing through the reed on its way to fill the vacuum created by the exhauster. When (C) is closed no air can pass the reed, which is thus prevented from sounding, even though its pallet may be open.

As has previously been explained, a greater or less wind pressure makes no perceptible difference to the pitch of the reeds, whereas the volume of tone is very largely influenced by the strength of the wind. It is therefore apparent that, if the wind ordinarily admitted to a set of reeds is partly reduced or cut off, the tone will be made soft to a corresponding degree.

The type of reed cell illustrated in this chapter enables a reduction of the wind supply to be made in a very simple manner by means of an additional drawstop which opens the mute only a fraction of its normal amount, and in this way a single set of reeds is frequently made to do duty either as a loud or a soft toned register as desired.

Stops thus acted upon are said to be "muted," "borrowed," or "derived," three terms which mean one and the same thing.

The soundboard employed in the harmonium and instruments of a similar nature in which the reeds are sounded by pressure wind is very different from that as described for the suction organ. In this case the vibrators are not placed inside the reed cells at all, but are screwed to the underside of the soundboard over an opening which communicates with the cell above, as shown in the section Fig. 7. One of these cells or channels is required for every reed in the organ; the whole being technically known as the reed pan.

THE REED PAN

In construction, the reed pan consists of a shallow tray or frame usually from about 2ft. 10in. to 3ft. in length, and from 1ft. to 2ft. wide, according to the number of stops or registers it

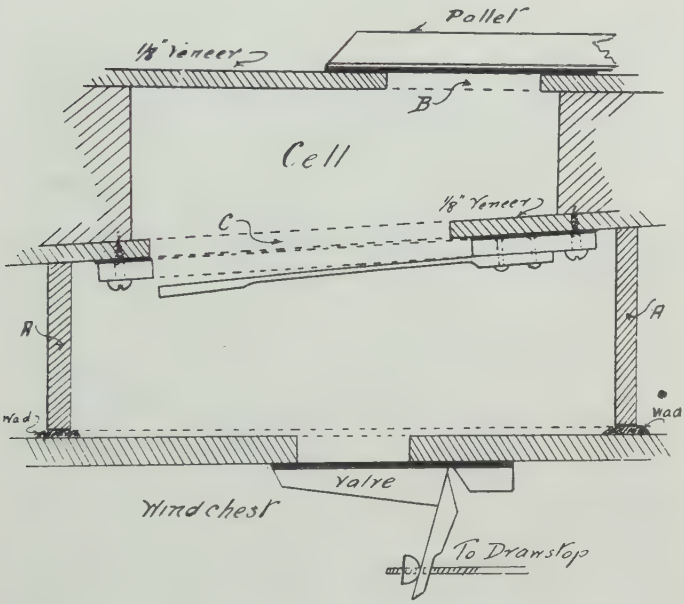

Figure 7. SECTION OF HARMONIUM REED PAN.

contains. Its length is equally divided by wood bars or division walls, about $\frac{1}{8}$in. thick, into sixty-one transverse channels or grooves, the divisions being generally spaced about $\frac{1}{2}$in. apart, centre to centre. The channels or spaces between these bars are also divided in their length into so many separate parts, termed "cells," according to the number of stops on the soundboard.

The shape and capacity of these cells has considerable bearing upon the quality or *timbre* of the reeds, but there does not seem to be any particular standard employed in setting out their length and depth, and all such measurements are arrived at em-

pirically. As in the suction cavity board, the width is practically determined by the necessity of placing each cell immediately beneath, or in line with, its corresponding key, and allowing for the thickness of the divisions, they cannot therefore be more than about $\frac{3}{8}$in. or $\frac{1}{2}$in. wide. Apart from this, however, the proportions as to length and depth gradually decrease from the lowest to the top note.

As an illustration, we will take an average set of measurements. The channel or cell for the lowest C of a 16ft. stop may be $1\frac{1}{4}$in. deep by about $4\frac{1}{2}$in. or 5in. long, and the top C of the same stop $\frac{3}{16}$in. deep by about $1\frac{1}{4}$in. long. For an 8ft. stop, 1in. deep by $4\frac{1}{2}$in. at bottom C and $\frac{1}{8}$in. deep by 1in. long at top C, from which it will be seen that in order to decrease the depth and length of each cell or channel to a proportionate degree it is necessary that the reed pan be made taper, not only from end to end, but also from side to side. It should be noted that the above measurements are only approximate, as the length varies according to the quality of voice required, being longer for the cor anglais or flute, and similar full-toned stops, than for the more reedy stops, in addition to which various makers favour different scales. The reed pan may, if desired, be made from a board of pine or beechwood of graduated thickness (the grain of the wood running across its width), in which the rows of cells are morticed out. This method, however, is not an easy one, and anyone wishing to construct a reed pan for more than a single stop will be well advised to build it up from strips of thin mahogany, or pine, about $\frac{1}{8}$in. thick for the divisions with suitable lengths of stuff about $\frac{3}{8}$in. thick for filling-in pieces between the divisions to form the cells. Fig. 8 shows part of the reed pan in plan, with details of this construction.

The top and bottom surfaces of the reed pan after being planed perfectly level, are completely covered in with an $\frac{1}{8}$in. veneer of either beech or white sycamore, and this must be properly glued down so as to make an absolutely airtight joint, with the

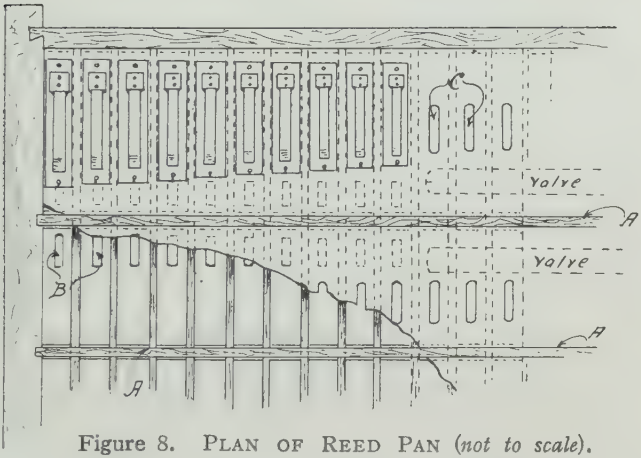

Figure 8. PLAN OF REED PAN (*not to scale*).

whole of the division walls and frame, as any defect in this part of the work will cause a running from one note to another.

The reed apertures (see C, Fig. 8), over which the reeds are screwed, are cut through the veneer covering the underside of the channels, and corresponding pallet holes through the veneer forming the top surface of the reed pan. As before, there is no definite rule for the dimensions of these openings except that they must be suitable for the size of their respective reeds. Thus the reed aperture for an average 16ft. stop may be about $2\frac{1}{4}$in. long, by $\frac{3}{8}$in. wide at bottom C, diminishing to about $\frac{3}{8}$in. long by $\frac{1}{4}$in. wide at top C for the same stop; or for an 8ft. stop, from about $1\frac{3}{4}$in. by $\frac{3}{8}$in. in the bass, to $\frac{1}{2}$in. by $\frac{3}{16}$in. in the treble,—4ft. stops being correspondingly smaller.

In setting out the pallet holes (see B, Fig. 8) where there are several stops, it is necessary to get them as close together as possible, so that they may be easily covered by a single pallet. For more than four stops, however, it is usual to provide two pallets to

each key, one being operated by the front end of the key, and the other by the tail. The average size of the pallet holes is about $1\frac{1}{4}$in. by $\frac{5}{16}$in. for bottom notes of a 16ft. or 8ft. stop, and $\frac{1}{2}$in. by $\frac{1}{8}$in. for the top C.

The reed pan is surrounded by a strong frame of pine or beechwood, the sides of which are usually about $\frac{1}{2}$in. thick, dovetailed into end cheeks $1\frac{1}{4}$in. thick. This frame is of a uniform depth, which may be from about $2\frac{3}{4}$in., and whilst flush with the top surface of the reed pan projects all round below it so as to form a wind compartment beneath the reeds. The several stops in the average harmonium do not run through the full compass, but are divided into two separate registers between E and F, — i.e., the twenty-ninth and thirtieth notes in the bass, respectively.

The windspace below the reeds is, therefore, likewise divided into bass and treble at this point by a division of $\frac{3}{16}$in. pine across its width. Both the bass and treble compartments are also divided lengthwise by similar wooden partitions (A A in Figs. 7 and 8), so as to completely separate each set of reeds, one from the other.

The whole of the divisions are planed perfectly level with the edges of the surrounding frame, so that when placed in position in the instrument each may bed down upon the "wad" provided for the purpose upon the upper surface of the bellows board, and thus form a series of perfectly airtight compartments.

These compartments are supplied by pressure wind from the windchest and through the valves in the bellows board which are opened or closed at will by drawstops so that when a stop is drawn, and the pallet raised by pressing down its corresponding key on the manual, the wind is free to pass through the reed and escape at the pallet hole.

THE CONSTRUCTION

NOW that we have examined the different methods of sounding the reeds in the harmonium and American organ, and noted the chief characteristics of the reed types themselves, we can proceed with the actual construction, taking it for granted that the prospective builder has decided upon a definite plan in regard to the specification of stops, number of manuals, and whether or no the instrument is to have a separate pedal organ.

I do not propose to lay down any hard and fast rules why schemes Nos. 1 and 2 should, or should not, be worked by pressure or suction wind, or that one type of reed is better than another, as so much depends upon circumstances, individual preference, cost, and ultimate use. Having in a previous chapter touched upon the advantages of this or that, I shall now give the necessary instructions for constructing the various parts, leaving the reader to make the choice which suits him best.

Reverting for a moment to the orthodox cavity board of the suction organ. If it is decided to employ this method of sound-

ing the reeds it will, as previously pointed out, be advisable to purchase the cavity board complete when ordering the reeds, for although perhaps not absolutely impossible, it is very highly improbable whether the average woodworker could turn out a satisfactory job with ordinary hand tools, and considering the comparatively small cost of the finished article it is doubtful if the necessary expenditure of time and trouble is worth while.

For scheme No. 1, two separate four stop cavity boards will be required. That is, one for the great and the other for the swell (leaving the pedal organ to be dealt with later). CC scale reeds and cavity boards should be ordered, each stop running through the full compass of sixty-one notes. For scheme No. 2 either a five stop board can be used, or one for the 8ft. and 4ft. stops, and a detached one for the 16ft. double diapason, the two bottom octaves of which (failing the provision of a separate pedal organ) could then be acted upon by the pedal board.

For the benefit of those readers who would wish to construct for themselves the whole of the internal mechanism of the organ, I shall, before concluding this chapter, endeavour to describe a simple type of soundboard upon which the ordinary American organ reeds can be used quite successfully, thus doing away with the necessity for buying the cavity boards.

The harmonium reed pan, or pressure wind soundboard, is a fairly straightforward piece of work to undertake, and given care and good joinery is not too difficult a job, the easiest method being as follows.

For scheme No. 3, the reed pan will measure 2ft. 9½in. long and 19½in. wide, although this width need not necessarily be constructed in one piece, but can be built up in two separate parts, one for the front organ containing the 8ft. and one 16ft. rows of vibrators, and the other for the back organ with one 8ft. and one 4ft. rows. The former will then be 9¾in. wide, and the latter 8½in., making together 18¼in., a division bar 1¼in. thick between them, making up the total width of 19½in.

The width of the back organ pan will, if desired, allow room

for an additional half set of treble reeds, say the voix celeste, which, although not included in the original specification, is a very useful stop to have, and consists of 8ft. reeds tuned slightly sharp so as to beat when drawn with another 8ft. stop.

To make the reed pan for the front organ, first prepare an oblong frame of $\frac{1}{2}$in. pine, 2ft. $9\frac{1}{2}$in. long, by $9\frac{3}{4}$in. wide, outside measure. This frame is not of uniform depth, but is made to taper from end to end, and also from side to side. The front left hand extreme end (the bass) is therefore to be 1in. deep, tapering off to a full $\frac{1}{8}$in. at the further extreme end (the treble), whilst the back left hand end is $1\frac{1}{4}$in. deep tapering to a full $\frac{3}{16}$in. at the treble, or right hand end.

At a distance of $15\frac{3}{4}$in. from the bass end a strip of $\frac{1}{4}$in. pine s firmly glued between the sides, and divides the frame into two parts,—i.e., bass and treble, the latter being $17\frac{1}{2}$in. long. The frame with the division between bass and treble will now appear as in Fig. 9.

The bass part is next divided into twenty-nine equal parts, each a full $\frac{3}{8}$in. wide, and separated from one another by division bars about $\frac{1}{8}$in. thick. The treble part is likewise divided into thirty-two parts, those at the extreme treble end being made very slightly narrower by using divisions a trifle thicker.

The frame should next be placed upon a perfectly flat surface, and temporarily fastened down to prevent it twisting, or casting out of truth. The division bars are then prepared from nice, clean, dry stuff, about $\frac{1}{8}$in. thick, and carefully fitted and glued between the sides of the frame. Provided they are wide enough they need not be finished to the exact width at the moment, as they will require to be planed off after the filling pieces have been glued in. When all the bars are fitted, and the glue completely set, the next job will be to mark the position of the filling-in pieces between them to form the reed cells.

The average length of the lowest C of the 16ft. reeds is about 4in.; of an 8ft. set $3\frac{1}{2}$in.; and of a 4ft. set 3in. For the top C 16ft., $1\frac{3}{8}$in.; 8ft., $1\frac{1}{4}$in.; and 4ft. $1\frac{1}{8}$in. The cells will therefore

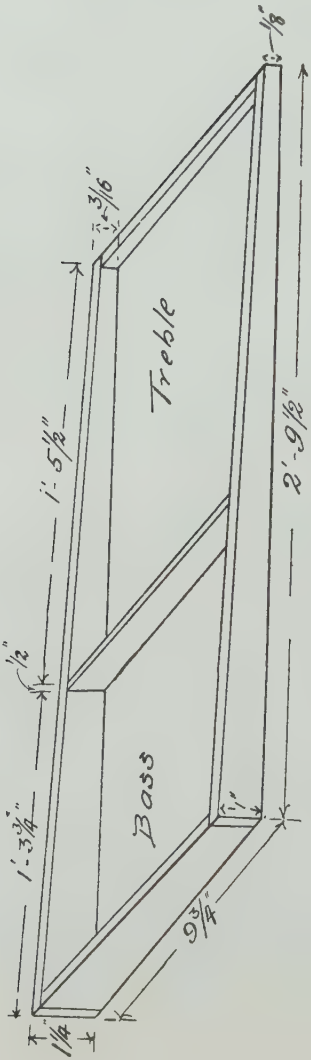

Figure 9. Frame for Built-up Harmonium Reed Pan.

gradually decrease in length from bass to treble to a corresponding degree, so that for the 16ft. lowest C the cell will be 4¼in. long, and at the top C 1¼in. For the 8ft., 4in. long at bottom C, and 1in. at top C.

To set off these measurements upon the bars, draw a pencil line across them from end to end of the frame parallel with, and at a distance of 4in. from the front outside edge; also another line parallel with the last, but 4¼in. in from the back edge of the frame. The two lines will thus be about ½in. apart, and a piece of pine of this length, and equal to the greatest depth of the bars must be glued in between them all. This will divide the two stops one from the other, it being understood that the 8ft. reeds (cor anglais and flute) occupy the front of the reed pan, and the 16ft. reeds (bourdon and clarinette) the back. From the lines of these pieces set off the length of the extreme bass and treble C reed cells according to the measurements quoted above, when a line drawn across the bars between these two points will give the length of each cell throughout the compass. The spaces beyond where this line cuts and the ends of the bars must now be completely filled in with strips of pine cut to the requisite length and thickness, leaving only the openings as necessary to form the cells.

The work must then be set aside for a day or so to give the glue time to set thoroughly hard, after which the surface of the bars and filling-in pieces must be most carefully planed true and level with the sides of the frame.

During the process of planing down the division bars, continually test the work with a steel straightedge, so as not to leave any hollows or bumps, which would prevent the veneers (to be presently glued over them) making perfect contact at all points. This is important, as any defect in this respect is likely to cause a "running," or leakage of wind, from one note to another,—a difficult matter to rectify, once the reed pan is finished. Taking it for granted, however, that the work has been carefully carried out, we now have what is for all practical pur-

poses a solid board of graduated thickness, bearing a double row of perfectly clean mortices or openings, each a proportionate degree less in length and depth from bass to treble throughout the compass.

The next job will be to cover in each side of this board with a veneer of $\frac{1}{8}$in. wood, either pine or American whitewood serving the purpose equally well.

One of these surfaces—i.e., that which is underneath when the board is in the position, shown in Fig. 9, will carry the reed apertures, and the other the pallet holes, and these we will now proceed to set out—taking the reed apertures first.

For the veneer, perfectly clean and dry stuff is required. It should finish a full $\frac{1}{8}$in. in thickness, and there must be no knots or shakes. If difficulty is experienced in getting stuff sufficiently good in a single piece, it will be necessary to joint a number of smaller pieces to form the whole.

There are two ways of laying the veneer: one being to get out two pieces of stuff equal to the dimensions of the reed board, and to set out upon one of them the whole of the reed apertures, and upon the other the pallet holes. These openings, or mortices, are then cleanly cut out, either with a fret saw or small chisel, each sheet of veneer being afterwards thoroughly glued down on its proper side over the bars. The second method—and that which is likely to prove the easier, both for cutting the apertures and the subsequent glueing operations—is to lay the veneer in sections, one piece for each half set of reeds, taking care that the joins come over the centre of a bar or other solid part, and not across one of the cells. In either case the grain of the veneer will run from side to side across the width, and not parallel to its length.

Fig. 10 represents part of the two sides of the reed pan, in which (A) are the reed apertures; (B) the pallet holes; and (C) the cells; it being understood, that when in position in the organ the part showing the reed openings will then be face down, so that the 16ft. stop will be at the back.

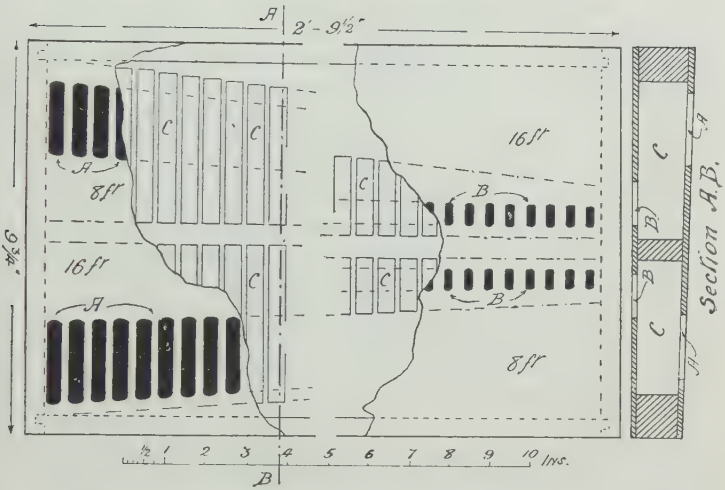

Figure 10. Plan and Section of Reed Pan (part of).

As the measurements for the reed apertures and pallet holes have already been given, it is unnecessary to again set them out here. Considerable care is, however, very necessary when marking out the work to ensure that when the veneer is glued to the soundboard, the various openings are placed quite centrally over their respective cells.

The whole of the openings having been cleanly cut out, the veneer is ready to be glued down over the cells. For this job, plenty of very hot, thin and strong glue should be quickly brushed completely over the bars and other parts of the board, as well as over the veneer itself, and then, before the glue chills, the surfaces are brought together and securely held by a number of G cramps until the glue has time to set properly. It is advisable that all glueing be done in a very warm room, and only one

side of the job at a time. The glue will then be less liable to chill and cause faulty joints.

When both sides of the board have been covered, the work should be put aside for the glue to set thoroughly hard, after which both surfaces may be gone over with a sharp and finely set plane, and finally finished off with fine glass paper till perfectly smooth and level.

The back organ part of the soundboard will be made in an exactly similar manner; but as it is only required to carry one 8ft. and one 4ft. row of reeds (bassoon and hautbois 8ft., clarion and fife 4ft.) it will need to be but 8½in. wide.

The cells are to be set out and built up on the lines already described, and for the 8ft. stops will be 1¼in. deep by 3¾in. long at CC, diminishing to ¼in. deep by 1in. long at top C; and for the 4ft. stop, 1in. deep by 3in. long at CC, and ⅛in. deep by ¾in. at top C.

If it is desired to add another half set of 8ft. reeds in the treble to form a céleste or other stop, room must be made for cells of suitable length by placing the trebles of the other two stops further apart.

The reed apertures and pallet holes will, of course, be set out to such dimensions as required by the size of the particular reeds it is intended to use, and it need hardly be said that each cell in the back part of the reed pan must be absolutely in line, and square with those of the corresponding notes in the front part: this also applies to the pallet holes.

When both are finished as previously described, the front and back sections are ready to be glued together to form the complete board. They are divided one from the other by a thick bar which also serves to materially strengthen the whole, and for this purpose prepare a piece of sound, and very dry, yellow deal or whitewood (I should have said "pine" were it not for the fact that it is at present—1927—almost unobtainable) 1¼in. by 3in. wide, and 2ft. 9½in. long, and carefully face it perfectly square on all sides.

Now take the front and back sections of the soundboard and lay them on the bench with the sides bearing the pallet holes underneath, and having placed the 1¼in. division bar between them glue all three together, taking care to have the pallet holes perfectly level and square with one another.

Two pieces of well seasoned beech will next be required for the end cheeks. These are each 1in. thick, 3in. wide, and 19½in. long; and after the ends of the division bar and the soundboard have been shot perfectly flush are to be glued in position, one at each end of the reed pan. Two lengths of ½in. whitewood or beech, 3in. wide and 2ft. 11½in. long, are then likewise glued to the front and back edges of the pan, as well as to the ends of the cheeks (to which they should also be screwed), care being taken to make all the joints perfectly airtight, and thus enclosing the whole in a kind of tray of which the soundboard forms the bottom.

The next job will be to divide the various rows of vibrators so as to isolate each register in a separate wind chamber. The admission of the wind from the bellows to these chambers will eventually be controlled by drawstops, so that the different registers may be brought into operation or not, as required.

The partitions forming these chambers may be made from ¼in. whitewood, and when fixing see that their lower edges are properly bevelled off to the same angle as the surface of the soundboard so as to make, when glued in, close and perfectly airtight joints.

As previously explained, the stops of the American organ and harmonium are invariably divided into bass and treble, and if it is desired to follow this rule a transverse division must be fixed across the soundboard between notes 29 and 30 from the bass. It is, however, much better to let all the stops run through the full compass, and in such case this last division will not be required.

When this stage is reached the construction will appear as shown in Fig. 11. Finally, the edges of the frame and

division walls are all planed exactly level and flush with one another, and the reed pan is then complete and ready for the reeds.

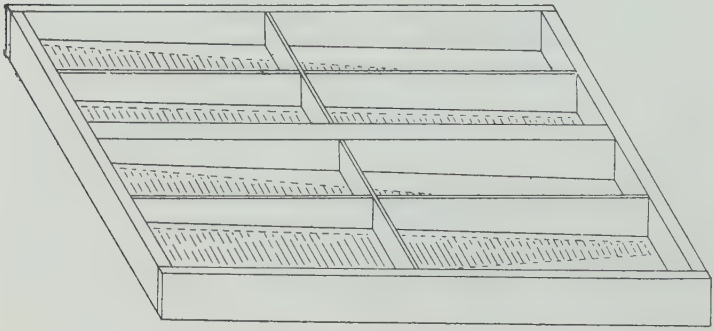

Figure 11. Construction of Reed Pan

When a larger number of stops is required it is usual (in order to keep the width of the soundboard within reasonable limits) to employ a somewhat different type of reed cell in which the reed is placed in a vertical position. This more particularly applies to the basses, where owing to the length of the reeds a great deal of space is required to accommodate them in a horizontal position, whereas the treble reeds being so much shorter, are more easily worked in. Frequently, however, both the bass and treble (except the last few notes at the top) of the 16ft. and 8ft. stops are provided with cells of this description. A section of this type of cell is illustrated in Fig. 12, and may be easily built up from thin material, it being, of course, understood that each cell diminishes in proportion to the size of reed.

Although primarily intended for the harmonium Scheme No. 3, the reed pan or soundboard just described is not necessarily limited to the use of that particular instrument, but

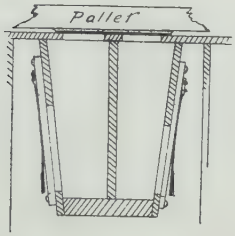

Figure 12. SECTION OF VERTICAL REED CELLS

can be employed equally well for any kind of reed organ in which it is intended to use pressure wind and harmonium reeds. If employed for Nos. 1 and 2, all the registers will, of course, be arranged to run through the full compass by simply omitting the cross partition dividing the bass from the treble.

In dealing with the subject of soundboards, I have so far confined the description to the everyday type of cavity board of the American organ, and the reed pan of the harmonium. In my opinion, however, both these arrangements have in common one fault, in-as-much as in practically every type of reed organ the reeds are either stowed away down in the interior of the instrument, or equally buried under the keyboard.

Without for a moment disputing that fine instruments can be built on these lines, and at the same time realising that this placing of the reeds enables manufacturers to employ a very simple and reliable form of key and drawstop action, I nevertheless think much better results, and more resonant and pipe-like tones can be obtained from reeds placed in a suitable and open position above the level of the keys. The sound has then some chance of egress without interference from the mechanism of the action work. With the present arrangement, in many types of reed organ, a really efficient form of swell organ is impossible, owing to the stop action passing through the sides of the box.

What is really required (at all events from the amateur's point of view) is a soundboard which is at once simple, effective, and inexpensive in construction; has nothing to get out of order; and can be used either for harmonium or American organ reeds. It must also be of reasonable dimensions, with a simple draw-stop action and capable of enclosure in an efficient swell box if required. At the same time the reeds and other parts should be easily accessible for adjustment and repair.

With this end in view, I now propose to describe a soundboard which I think fulfils most, if not all, these requirements. The dimensions will, of course, depend upon the number of stops required, and to some extent upon whether harmonium or American organ reeds are to be used. The average length of a five octave keyboard is 2ft. 9½in. and we can therefore regard this as a suitable length for the soundboard. The harmonium reeds are considerably longer than those of the American organ, and the width of the soundboard must be arranged accordingly, so that whereas 13¾in. will be sufficient for four stops of the latter, a similar number of harmonium reed stops will require a width of not less than 15in.

To make the soundboard for one 16ft., two 8ft., and one 4ft. stop, first prepare a frame of clean yellow deal, having an inside measure of 2ft. 9½in. long, 1ft. 3in. wide, and 1¼in. deep. The sides of this frame are to be of ¾in., and the ends of 1in. stuff. Each side is to be divided into sixty-one equal spaces full ⅜in. wide with an ⅛in. bar between each. The average width of the larger reed frames is about ½in., and therefore the spaces in the two bottom octaves may be set out a trifle over the ⅜in.

Lines representing the thickness of the bars should be squared across the inner face of the frame sides, and a fine saw cut made across each to a depth of about $\frac{3}{16}$in., the intervening wood being afterwards removed with a small chisel, thus leaving a series of grooves into which the ends of the division bars will fit. Be sure to set out both sides of the frame to exactly agree, otherwise the bars when fixed will not be parallel or square with the sides.

Next prepare sixty pieces of $\frac{1}{8}$in. stuff, each $1\frac{1}{4}$in. wide, and $15\frac{3}{8}$in. long for the division bars, and glue them across the width of the frame, making sure the ends fit securely into their respective grooves. The glue having set completely hard, both sides of the frame must be carefully planed down till the surfaces of the bars are perfectly level.

Prepare also a strip of $\frac{3}{16}$in. stuff, 2ft. $9\frac{1}{2}$in. long and 6in. wide, with the grain running *across* its width, and upon it set off the exact centre of each of the channels in the soundboard. Upon these centre lines mark out the pallet holes, making them 4in. long and a $\frac{1}{4}$in. wide, and leaving a full $\frac{1}{4}$in. of solid wood between each hole to form a seating for the pallets. The pallet holes may be cut out with a fret saw, and afterwards neatly cleaned up with file and glass paper. Both edges of the strip should be planed off to a feather edge, after which the whole may be glued down along the centre upon the *underside* of the soundboard, taking care that the pallet holes are exactly over their respective channels between the bars, and using plenty of thin hot glue for the job so as to ensure a perfect joint between the parts.

We can now turn the soundboard over, and proceed with the covering in of the top surface of the channels to form the table or reed board upon which the vibrators will be screwed. For this purpose sufficient $\frac{1}{8}$in. or $\frac{3}{16}$in. pine or mahogany will be required to cover completely the whole area of the soundboard top. It need not be in one piece, and, in fact, it will probably be much easier to glue down over the bars if composed of several narrow lengths, although if this method is followed, all the contiguous edges must be carefully shot so as to form perfectly close joints. The grain of the wood should run across the width of the soundboard, as this enables the reed mortices to be cut with greater facility.

Having prepared sufficient thin stuff to form the complete covering, temporarily fasten it in position on the soundboard and set out upon it the whole of the mortices or reed apertures for the several stops. These will, of course, be arranged in separ-

ate rows, exactly as previously described for the harmonium reed pan, except that in this case there is to be no division piece between bass and treble.

Take care in setting out these mortices, that all come fairly over their respective channels, and also that each row of reeds is exactly in line with one another.

The approximate dimensions of the reed apertures have already been given in the chapter dealing with the harmonium reed pan, and as they are similar in the present instance there is no need to recapitulate here. If, however, American organ reeds are to be used, the openings will require to be considerably narrower and shorter, the requisite measurements being preferably obtained from the actual reeds.

To work the mortices, take a keen twist bit (that is, one that will leave a really clean hole without tearing) of a size equal to the exact width of the mortices and drill a hole at the extremities of each. See that all the borings are perfectly in line, otherwise the resultant mortices will not be orderly or neat in appearance. When all the holes are drilled the apertures can be completed by removing the intervening piece of waste wood between each pair of borings, either with a small chisel or fret saw, the whole being afterwards finished with file and glasspaper.

The cutting of the mortices having been satisfactorily accomplished, the various sections of the table may be well glued down over the soundboard bars, using plenty of thin hot glue to make sure the joints are all sound and wind-tight. A number of cramps or other suitable means must be employed to hold the work while the glue is drying, as there is always a tendency on the part of such thin stuff to warp or curl from the effect of the hot glue.

When dry, the work can be examined from the underside of the channels for faulty places, and, if any such be found, more thin glue must be run in between the bars and the defect made good. The whole top is finally cleaned over with a plane and finished off to a perfectly smooth surface with fine glasspaper.

To complete the underside of the soundboard, the open ends of the channels on each side of the pallet holes must be covered in. Wood is not necessary for this and a sheet of good smooth drawing paper will serve equally well. The paper should be sufficiently large to cover completely the whole surface, including the pallet holes.

Before glueing, the paper will need to be well damped and allowed to stretch, otherwise it will be impossible to glue it on without any wrinkles. Rub the paper well down over the bars and pallet holes so as to make perfect contact everywhere, and when quite dry the superfluous paper may be removed from the pallet openings with a sharp pointed penknife.

Now for the wind-chest. This is a shallow airtight box or casing built on to the underside of the soundboard, so as to entirely enclose the pallet holes. It can be constructed of ¾in. deal or whitewood, in the form of a frame exactly the same length as the soundboard by about 1ft. in width and 2½in. deep. This frame is glued and screwed down on to the bars as shown in the section Fig. 13, and all the joints should be made thor-

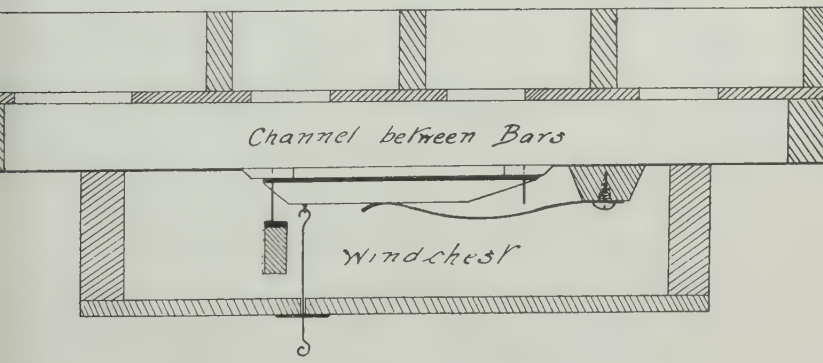

Figure 13. SECTION OF SOUNDBOARD

oughly wind-tight by glueing narrow strips of paper or linen tape over them.

The windchest bottom or cover-board can be made of $\frac{3}{8}$in. whitewood, but need not be fastened down for the moment, as the pallets have yet to be made and fixed.

The next job is to fit the divisions to form the stop-chambers upon the upper surface or table of the soundboard. These are built up from strips of $\frac{1}{2}$in. pine or mahogany. They should be about $1\frac{1}{2}$in. in depth, and placed so as to follow the line of the reed-frames as these diminish towards the treble. Each stop chamber will thus extend from end to end of the soundboard-table, and be more or less wedge-shaped in plan. They are, of course, glued permanently to the table, and all joints must be absolutely airtight.

Each of these stop-chambers will eventually be fitted with a hinged airtight lid or cover actuated by drawstops; but the construction of these may be left for the time being, for reasons to be explained later on.

THE SOUNDBOARD PALLETS

IN a previous chapter, the so-called soundboards for the American organ and the harmonium are shown to consist of a series of separate shallow grooves or channels by means of which the wind is admitted to the vibrators of the various stops. To control this wind supply so that only such notes as required shall sound, each channel is fitted with a moveable, airtight valve, termed the "pallet."

These pallets are faced with soft leather, and are normally kept closed by a light steel or brass wire spring. They are also connected to the keys of the manual by some simple form of action work, and thus each note in the compass may be sounded or not, as desired. Now, although the pallets are very similar in construction, they vary considerably in arrangement.

Taking the American organ first. Upon referring to Fig. 14, it will be seen that the pallets are operated by a short wooden rod, about the size of a lead pencil, termed the "plunger," working through an aperture bored in the solid part of the cavity board. The plungers are moved either directly by the manual keys,

or by short levers or other action work connected thereto, so that when a key is depressed, the plunger pushes down the pallet which opens to a uniform extent upon two guide pins working in nicks or slots cut for the purpose in the pallet ends. When the key is released the pallet is smartly returned by its spring.

This is, of course, a very simple and generally reliable form. Its chief objection is that owing to damp the plungers sometimes swell and stick, and so prevent the pallets closing properly, or through a too vigorous blow upon the keys a pallet is sometimes driven off its guide pins, and becomes lodged permanently open, causing a cypher only to be rectified by entirely opening up the instrument so as to get at the underside of the cavity board. This troublesome fault could easily be prevented if makers would only provide some simple form of stop or thumper rail beneath the pallets, making it impossible for them to open too far.

American organ pallets vary in length according to the number of stops on the cavity board. They are usually from 4in. to 8in. long, and about ½in. wide, by ¾in. or ⅝in. deep, being shaped as shown in the diagram, and covered on the face with a strip of sheepskin leather backed with soft felt. Sometimes a double thickness of leather is used instead of felt and leather.

When the pallets are very long, and only a comparatively small proportion actually covers the pallet holes, for economy's sake it is usual for the leathering to be discontinued except where required to properly cover the holes as shown by the thick black lines in the diagram, Fig. 14.

The pallets can be bought ready made in sets, and either leathered or not, as desired. But if made by the amateur himself, it is very necessary that they be constructed of well seasoned wood—either pine or mahogany—and planed up perfectly true, and free from twist, a stipulation which applies to all pallets in general, whether used for soundboards or bellows. Use also only the best felt and the proper sheepskin leather. It may be noted in passing, that sheepskin (which, by the way, is the only kind of leather to be used in organ building) is specially

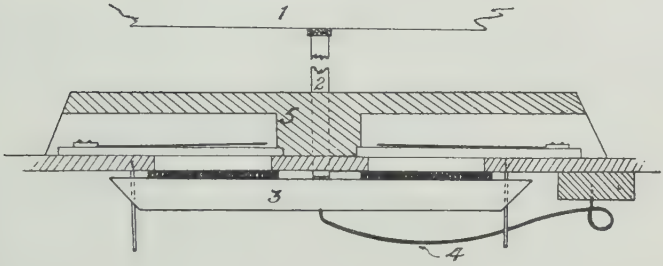

Figure 14. AMERICAN ORGAN PALLETS
(1) *Key* (2) *Plunger* (3) *Pallet*
(4) *Spring* (5) *Cavity Board*

prepared for the purpose without salt. There are two kinds known in the trade as "strained" and "unstrained." The former is used for bellows, reservoirs and similar parts, and the latter for pallets and valves generally. When used for pallets, it is glued upon the grain or smooth side, which must first be slightly roughened with fine glass paper to afford the glue a better hold.

Harmonium pallets (see Fig. 15), whilst serving the same purpose, are quite different in form and action. They are also situated upon the top of the soundboard instead of underneath as in the American organ, and are therefore more easily accessible should adjustment be necessary.

Here again they vary considerably according to the size

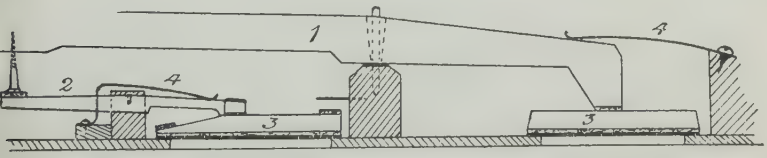

Figure 15. HARMONIUM PALLETS
(1) *Key* (2) *Stem* (3) *Pallets* (4) *Spring*

and position of the pallet holes, and whereas in the American organ one pallet is usually sufficient to cover the pallet holes for all the stops on one cavity board, in a harmonium of more than two or three stops there are more often two pallets for each key,—one for the back, and one for the front organ.

The pallets of the back organ are usually attached by a flexible leather hinge or connection direct to the tail of the manual keys, and those of the front to wooden levers centred in a wood beam, and worked by very short plungers, or more often an ordinary screw projecting from the underside of the key front. These pallets are generally about ½in. in width, are completely faced with soft leather, and just sufficiently long to cover the pallet holes, guide pins suitably placed between them being used to prevent them getting out of alignment.

As in the American organ, wire springs are used to keep them closed. The springs employed in many commercial instruments are frequently much too strong, giving an unpleasant springy touch to the keys, and causing the pallets to clack sharply when in use. This is unnecessary, and the springs need be no more than just powerful enough to close the pallets smartly and firmly.

For the soundboard shown in Fig. 13, a hinged pallet as therein illustrated is used, the difference being that instead of opening equally at both ends, it is pulled open by a thin wire attached to the front end and termed a "pull-down." The tail-end of the pallet is hinged upon a metal pin working in a slot or cut in the tail, guide pins being placed at each side to ensure the pallet retaining its correct register over the pallet hole.

In making the pallets the felt should be glued with chilled glue, and afterwards the sheepskin over the felt, so that when the glue is set, both thicknesses may be neatly trimmed off with a sharp knife. A small quantity of French chalk is then sprinkled upon a sheet of very fine glass paper—known as "flour" paper—and the leather surface gently rubbed upon till perfectly smooth. When mounted over the pallet holes, a light tap with the hammer will ensure a most perfect and airtight fit.

THE BELLOWS

THE term "Bellows" is applied generally to that part of the organ wherein the wind for sounding the reeds is generated, and as the manner of utilising this wind supply in both the harmonium and the American organ has already been fully explained in a previous chapter we can now proceed with the details of construction.

Upon referring to the diagram, Fig. 16, it will be seen that the ordinary harmonium or pressure bellows consists mainly of three parts: (1) the *Feeders;* (2) the *Reservoir;* and (3) the *Windchest.*

The feeders are usually wedge-shaped in form and hinged at one end upon the underside of the *Middle board* (A). The bottom board of each feeder is furnished with a number of circular apertures covered upon the inside with movable leather flaps or valves for the purpose of admitting air from the outer atmosphere to the feeders (see Fig. 17).

The feeders are each separately connected to the windchest by wind-trunks (B), frequently termed *chimneys*, by means of

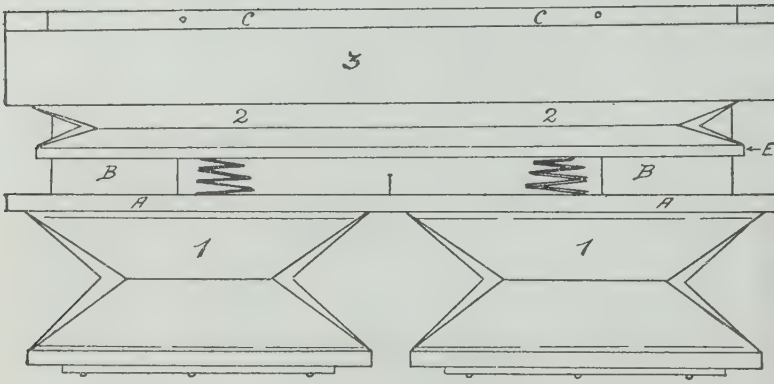

Figure 16. ELEVATION OF HARMONIUM BELLOWS
(1) *The Feeders* (2) *Reservoir* (3) *Windchest*

which the compressed wind from the feeders is conveyed to the windchest. Leather valves are likewise fitted to the chimneys, and prevent a return of this compressed air to the feeders.

The windchest itself consists of a shallow airtight box extending practically the full width and length of the instrument, and upon the underside of its bottom board is attached the *Reservoir* (2). This reservoir has folding sides termed *Ribs*, which allow it to expand in a downward direction as compressed air is driven into it through a large valve (called the "Expression pallet") placed in the bottom board of the windchest.

Two strong spiral springs are placed between the middle board and the bottom board of the reservoir and by their aid the wind pressure in the windchest is normally determined, such wind pressure being generally somewhere about two inches.

The before mentioned expression valve can, however, be closed at will by means of a drawstop, and when this is in operation the wind from the reservoir is shut off from the windchest

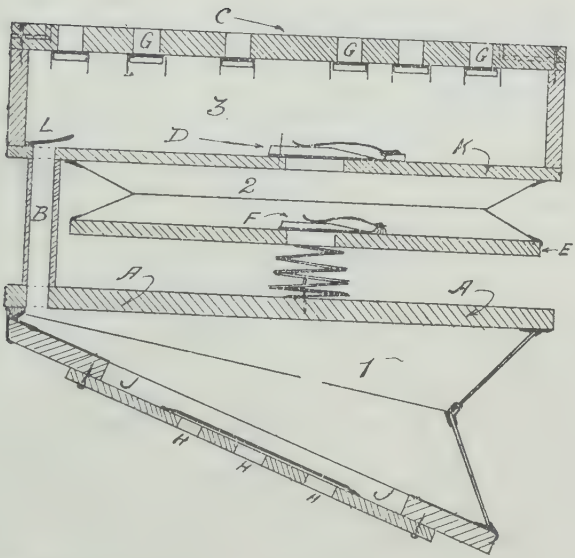

Figure 17. SECTION OF HARMONIUM BELLOWS

which is thus placed in direct communication with the feeders. The wind in the windchest being now no longer influenced by the action of the springs can be made either great or less according to the force with which the foot pedals are worked.

The upper board of the windchest (C, Fig. 17), termed the *Bellows board*, is furnished with a number of rectangular openings (one for every set of vibrators), each of which is covered upon the underside with a movable valve or pallet normally kept closed by a steel wire spring and operated by a drawstop.

The reed pan, as already described, rests upon the upper side of the bellows board whereon strips of soft leather (or what is known as the *Wad*) are placed so the walls of the reed pan and

CAMROSE LUTHERAN COLLEGE
LIBRARY

its various divisions between the several rows of vibrators may bed securely down and form perfectly airtight compartments, to which the wind from the bellows may be admitted or shut off by the above-described stop valves.

The dimensions of the bellows found in the average harmonium are more or less determined by the size of the reed pan, being made so that the bellows board of the windchest is of practically the same length and width. Thus, supposing a reed pan to contain (say) four full rows of vibrators and having a width of 19in., with a length of 3ft., then in all probability the measurements of the bellows windchest will be 19in. wide and 3ft. long also, though usually some slight extra length amounting to a few inches is added and the bellows made the full length of the case.

There are always two feeders, and they require to be as large as possible so as to throw a good supply of wind, and the two together are therefore usually made so as to occupy practically the whole area of the middle board. A two manual organ should, of course, be fitted with bellows correspondingly larger to supply the increased number of registers, if such there be, so that it is possible to play on the full organ without unnecessarily pumping the feeders.

The whole of the woodwork in the bellows may be of clean and well-seasoned yellow deal or whitewood. First prepare the middle board, making it 3ft. 6in. long and of such width as required to correspond with the width of the soundboards or reed pan (for the two manual this width ought to be about 24in.). It requires to be substantially made, as it has to support the feeders and other parts, and should therefore be not less than $\frac{7}{8}$in. or 1in. in thickness. As it is unlikely that a board wide enough can be obtained in a single piece, it must be built up of two or more narrow widths carefully jointed, and to guard against warping or casting, the ends should be ledgered with tongued and grooved joints.

Having prepared the board, set out upon it the plan of the

two feeders, and cut out the apertures where the wind trunks are to come. These latter are shown at (B) in the drawings, Figs. 16 and 17, and should measure about 12in. by 2in. Although in these drawings they are placed at the back, quite frequently the wind trunks will be found at the ends of the bellows, in which case the feeders are hinged back to back at the centre of the middle board.

The bottom boards of the two feeders (J, Fig. 17) are next prepared from $\frac{7}{8}$in. or 1in. stuff. Although generally made in a single piece, they should, properly speaking, be framed up and fitted with removable outside panels, so that it is possible to get at the valves for repair or readjustment should occasion arise. Without this provision, it will be necessary to rip up the leathering of the feeder in order to get at a defective valve. To make them so, prepare two frames from 3in. by 1in. stuff and of such size as required, using tongued and mitred joints for the corners. Next get out two panels of $\frac{1}{2}$in. yellow deal large enough to cover in the frames with sufficient overlap to allow for screwing on. Three groups of three $1\frac{1}{4}$in. holes are to be bored through these panels for the valves, as shown at H, Fig. 17, after which they may be screwed in position upon the outside of the frames. To ensure a perfectly airtight joint between the panels and the frames, a strip of sheepskin leather should be glued round the margin of the frames before the panels are screwed down.

Now prepare another board for the bottom of the windchest (K, Fig. 17), making it very slightly less in length and width than the middle board, and about $\frac{3}{8}$in. in thickness. The position of the wind-trunks will, of course, require to exactly register with the apertures already cut in the middle board, but instead of a single opening, a number of 1in. centre-bit holes should be bored close together, but so as to leave a narrow bar between each. The reason for this is that these separate holes afford a better seating for the soft leather valves (L, Fig. 17) which will presently be fitted over them. In the centre of this board is placed the expression pallet, which, as previously described, admits the

wind to the reservoir, and for this, an opening about five or six inches by three should be cut. (See D, Fig. 17).

The sides and ends of the windchest may be made from $\frac{3}{4}$in. yellow deal. They should be about 3ins. deep, and the corners must be well made and quite airtight, the whole being securely glued down on to the upper surface of the bottom board.

The upper board, or cover for the windchest, termed the "bellows board," must next be built up from $\frac{7}{8}$in. stuff, the ends being ledgered as in the case of the middle board to prevent warping, and the rectangular openings for the stop valves cut out in such positions as required to allow the wind to enter each separate division in the reed pan. These openings are shown in the drawing (G, Fig. 17), and should measure about 8in. by $1\frac{1}{2}$in.

If the bellows board of an harmonium be examined, it will be noticed that in addition to the stop valves, there is a small valve placed fairly close to each of the larger ones, and bored through the thickness of the bellows board, so that one end is open to the atmosphere. Their duty is to carry off any stray wind which may leak through the stop valves, and they are therefore arranged so as to be opened by a short plunger which is pushed up by the closing of the stop valve. To make them, a $\frac{3}{8}$in. hole should be bored half-way through the thickness of the bellows board, a similar boring being made to meet them from the outer edge of the board.

The bottom board of the reservoir (E, Figs. 16 and 17) is simply a plain board of $\frac{3}{4}$in. stuff. It is made about an inch less in length than the underside of the windchest to which it will be attached by the folding ribs. As, however, the wind trunks are placed at the back, its width will be correspondingly less to allow it to just clear them in working.

To prevent over-blowing, a safety valve (see F, Fig. 17), is provided in the centre of this bottom board, and an opening about 3in. by 2in. should, therefore, be made for it.

For the various ribs of the feeders and reservoir, a quantity of straight-grained ¼in. pine or mahogany will be required. The ribs are shaped as shown in the diagrams, and for the feeders should be about 4in. wide, and for the reservoir 3in. wide. Their length is in all cases slightly less than the frames or similar parts to which they are attached, and the ends are shaped to an angle of 40 degrees, so that when the bellows are closed and the ribs folded together the contiguous edges do not touch. Two long and two short pairs of ribs will be required for the reservoir, and three pairs for each of the feeders, those for the sides of the latter being wedge shaped, as shown in the drawing (Fig. 17).

Before the ribs can be leathered, a ⅛in. bevel must be worked on all the edges where they fold, and upon refering to Fig. 18 it will be noticed that this bevelling is, in each case, made upon the side opposite that on which the ribs fold. Finally, just take off

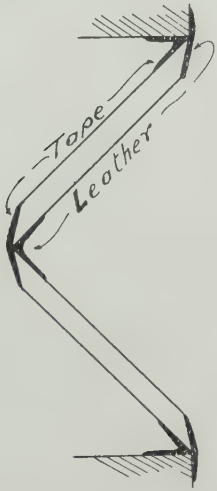

Figure 18. Method of Joining Ribs

the arris from any sharp edges to prevent the leather being cut through and the bellows woodwork is complete and ready for the leathering.

To make a really satisfactory job of the bellows, it is advisable to use only the best sheepskin leather. It is more expensive than the rubber cloth frequently used in reed organs, but this is more than balanced by the additional wearing qualities of good leather. On the other hand, the rubber cloth is cheap, can be purchased by the yard, and there is little or no waste in the cutting. It is known in the trade as "tosh," and can be had in various qualities and widths up to 60in.

The rubber cloth serves its purpose very well for small instruments, but for large bellows the leathering should be done with sheepskin. In any case, whether the rubber cloth is used or not, it is most desirable that the corners or gusset pieces of both reservoir and feeders should be of leather, as the rubber dressing is liable to perish, with the result that the bellows become more or less useless and soon require re-covering.

When purchasing the sheepskins, that known as "strained" should be obtained, and some care exercised to see that the skins are of a thickness and weight suitable for the size of the job in hand. In addition to the sheepskin a quantity of strong closely woven tape about 1½in. wide will be required, together with some stout webbing for the feeder hinges.

Before joining up, see that the edges of the ribs are shot perfectly straight; that the ribs themselves are not warped or twisted, and that the bevelling has been sufficiently and correctly done. Now cut the leather into strips about 1in. wide, using a sharp knife and a steel straightedge for the purpose. Then lay the ribs in pairs, face up, upon the bench, with the edges which are to form the centre hinge about ⅛in. apart, and glue a strip of sheepskin along the length of the contiguous edges. The leather should be glued upon its soft surface, using good strong and hot glue, and rubbing the leather into close contact with a rag wrung out in hot water,—

likewise removing any surplus glue. Where it is necessary to join the leather, the two parts should slightly overlap, having been first thinned down to a feather edge, so as to make an almost invisible join.

Leave each pair of ribs till the glue is thoroughly set, then turn them over and glue a strip of tape along the other side of the joins, taking care to rub the tape well down on to the leather between the ribs, which will thus be joined with an easily working hinge composed of tape on the inside and leather on the outside.

The ribs have next to be similarly hinged to their respective frames or boards, and as it will be impossible to get at the interior of the reservoir after the bottom board is fixed, it will be necessary to apply the tape first. The most simple plan will therefore be to glue a strip of tape along all the inside edges of the ribs, in each case leaving an overlap of half its width to be afterwards affixed to the bottom board and the windchest respectively.

As soon as the glue is dry, fold the ribs flat along the centre hinge, and also fold back the overlapping part of the taping. Now turn the windchest bottom up, and having first glued the tape, fasten each pair of ribs in their correct position. If the bottom board of the reservoir be now laid down over the folded ribs, its four sides should exactly coincide with the bevelled edges of the ribs, the tape of which should then be glued as before. A strip of sheepskin must next be glued along the outside of each join previously taped, for which purpose the reservoir is best somewhat extended or opened out.

The next job is to fit the gusset pieces over the openings at the corners between the ribs. To do this, extend the reservoir until the apertures at the corners show their greatest opening, not only in width, but in height as well. Now cut a paper pattern sufficiently large so as to completely cover this opening, with an all round overlap of about ¾in. It will be found that the pattern is roughly diamond shaped with the points

removed. The leather should be cut to this pattern, and after the edges have been thinned off, glued in position over the corners.

The feeders are to be taped and leathered in an exactly similar manner, bearing in mind that the triangular shaped side ribs must be cut short a couple of inches from the point so that they do not extend right into the hinge at the back of the feeders. Before being connected up with the ribs, the bottom boards of the feeders should be hinged to the underside of the middle board. For this it will be necessary to glue and screw a bevelled strip of deal to the underside of the middle board parallel to the back edge of, and the same length as, the feeder boards. The hinge itself is formed of a strip of stout canvas or webbing fastened on with glue and copper tacks, the whole being afterwards covered by a wide piece of sheepskin glued over the outside. The ribs are then fastened in, and the gussets put on in an exactly similar manner to that already described for the reservoir. An additional piece of leather will also be required to cover in the gap at the hinge. It should be noted that when glueing the grain or smooth side of the leather, it is necessary to first rough it with fine glass paper, otherwise the glue will not hold properly. When quite dry, all uneven edges should be trimmed with a sharp knife, any stray glue being sponged off and so leaving the whole neat and workmanlike.

The described method of leathering the bellows is one which will be found to be the most wear-resisting. In many commercial instruments, however, the use of the tape is entirely dispensed with, and the leathering confined to the single thickness of leather upon the outside. This procedure, although no doubt fairly reliable for small instruments, is not to be recommended for large bellows, and in any case the feeders should be taped and leathered to stand the continual hard wear to which they are usually subjected. It is also a general practice to cover the woodwork of the bellows with blue paper either pasted or glued on, but there seems little justifi-

cation for this, and the woodwork is just as well left in its natural state. The leathering should not be painted or otherwise covered.

The valves of the feeders are composed of pieces of soft sheepskin cut just large enough to cover completely each group of holes in the valve boards. To retain them in position they may be fastened with a row of copper tacks along one side, leaving the strip to act as a kind of flap. The leather must, however, be thick—either one good thickness, or two thinner ones glued face to face—otherwise the flaps will be blown right over by the wind passing through the valves. For this reason, it is better to fasten large valves by a short strip of leather glued to each corner.

The valve boards of the feeders are then ready to be screwed to their respective frames, and to ensure that all such joints are perfectly airtight, a narrow strip of felt should be glued round the margin of each board before fixing.

The waste pallet (see F, Fig. 17) is made from a piece of thin wood covered on the face with soft sheepskin. It is hinged at one end, and kept closed when not in use by a steel spring, and as it is inside the reservoir, it must, of course, be fitted before the bottom board is fixed to the ribs. A long, round-headed screw partly driven into the middle board operates the valve as soon as the reservoir is open to the required extent. The expression valve (D, Fig. 17) is made in a similar manner, but in this case is controlled by a drawstop.

The wind trunks or chimneys (B, Fig. 17) which connect the feeders with the windchest may be made from ¼in. stuff. They are usually about 6in. long, but may be rather more or less according to the size of the instrument. The leather valves which cover the end opening into the windchest are formed by a leather flap, in a similar manner to those of the feeders.

The spiral springs between the middle board and the bottom board of the reservoir are for the purpose of maintaining a constant wind pressure, and are similar to those used by up-

holsterers, there being sometimes one, two, or three, according to the wind pressure desired. Smaller springs (termed "gape springs") are sometimes placed inside the feeders to help them open quickly, but provided the bottom boards of the feeders are of substantial stuff, these are not necessary as the feeders quite easily fall of their own weight.

When completed, the bellows must be thoroughly tested for any leakage of wind, although this, of course, cannot be properly done before the top of the windchest is screwed down.

The feeders of the bellows are worked by two foot pedals, usually about 12in. long and 8in. wide. These are hinged to the front of the bottom of the case and transmit their action to the feeders by means of hardwood rockers, centred upon part of the framework of the instrument. (See 4 and 5, Fig. 25.)

For large reed organs of more than one manual, worked on pressure wind, I am of opinion that the double acting type of bellows, as used in pipe organs, give the best results, both as regards capacity and evenness of wind pressure. They are, however, rather more troublesome to make, and require more working space.* I am, of course, aware that intelligent and correct blowing is a *sine qua non* in harmonium playing, and that the expession stop is a great asset to the skilled performer; but in a modern instrument built on the lines of, and as a substitute for, the pipe organ, equally good results can be obtained with an efficient swell.

The bellows (or rather "exhausters") of the American organ are illustrated in Fig. 4, from which it will be seen that they are totally different, both in construction and use, from those of the harmonium. In this case they work by suction, and not by pressure, and for this reason the valves are placed upon the *outside* instead of the inside, as in the pressure bellows. Fig. 4 shows very clearly the general details of construction, and no

* For description and working instructions for making this type of bellows, see my book, "How to Build a Two Manual Pipe Organ," published by *Musical Opinion*.

difficulty should be experienced in making a good working apparatus.

In size they are usually made so the reservoir (A) practically occupies the whole area of the space between the underside of the windchest and the bottom of the case. The middle board (D) is a fixture whereas the back board (N) is hinged at the top so as to fold in toward the middle board. The front boards of the exhausters (C) termed "lifters," are hinged to the bottom of the middle board. There are no ribs to either the reservoirs or "lifters," and rubber cloth is invariably used for covering in the whole of the apparatus. The V shape springs (B, Fig. 4) by which the wind pressure is regulated, are fixed before the cloth is put on, and it will be noted that these springs keep the reservoir *open*, and not closed as in a pressure bellows. Sometimes these springs are placed outside the reservoir, and though they seldom need attention, this is really the best arrangement.

The various boards should be built up from well-seasoned stuff of fair substance, the ends being ledgered to prevent warping. The use of ply wood is not to be encouraged, although if sufficiently thick it is very useful for small panels.

It is advisable to provide a removable panel to the front of each of the exhausters, so as to give access to the inner valves (G, Fig. 4) should it be necessary, as if this is not done, and the valves get out of order, it will be necessary to partly strip the "tosh" before the fault can be made good.

The valves are made from sheepskin leather as described for the harmonium, it being essential that the soft side of the leather faces the valve seating.

The two lifters are connected to their respective foot pedals by a long strip of webbing which runs over the small rollers (M), and when at rest are kept closed by the springs (E).

The safety valve is placed in the back board as shown in Fig. 4, and needs no further description beyond the fact that it is operated by the short plunger projecting from the middle board.

THE MANUALS, ACTION, &c.

IN the majority of reed organs, the manual actionwork (that is the mechanism which connects the keys with the pallets) is of the simplest character, and may be said to comprise three distinct types,—(1) single manual, (2) two manual, and (3) the pedal action. Three manuals are occasionally found in larger instruments, but as the action for the third row of keys is more or less only a repetition, no further description is necessary.

In view of the very large number of different makes of reed organs now on the market, it need hardly be said that no two makers' actions are exactly alike in all details. Their similarity is such, however, that for all practical purposes it will be unnecessary to do more than describe the types ordinarily employed, as the initial requirements once understood, no difficulty will be experienced in working out more complicated movements.

Before dealing with the action proper, it will perhaps be advisable to commence with a short description of

The Keyboards.

The finger keyboards of the organ are termed "manuals," from the Latin word *manus*, "a hand," to distinguish them from the keys of the pedal clavier which are played with the feet, and an instrument is therefore spoken of as a "one" or "two" manual as the case may be.

The compass of practically all commercial reed organs is five octaves, from CC to C in alt. for the harmonium (known as the CC scale), and from FF to F (or FF scale) for the American organ.

The keys themselves are really levers working on a fulcrum, and are of two kinds,—i.e., "centre-hung" and "back-hung." Centre-hung keys are provided with a mortice more or less near the centre of their length, in which they work upon phosphor bronze pins projecting from a stout wooden bar or rail (termed the *middle rail*) forming part of the keyframe, thus having an extended part (or *key tail*) beyond the fulcrum point.

The back-hung keys are much shorter, and the pin mortices are set as near as possible to the extreme end of the key-tail. In some makes, each key-tail has also a semi-circular opening, into which the nosing of the *lock rail* of the key-frame is fitted to prevent the keys working off the pins, whilst in others, the same purpose is served by a thin fillet of felted wood screwed down over the ends of the key-tails.

American organs are generally fitted with back-hung keys, and for a single manual instrument with the orthodox type of cavity board are at once simple and reliable. Harmoniums of more than two rows of reeds usually have centre-hung keys, and this type has many advantages, greatly simplifying the remainder of the action, especially for two manual organs where couplers are required. In fact, some couplers, such as the swell to great, are very difficult to fit when both the swell and great keys are back-hung. The provision of centre-hung keys, likewise enables the soundboards to be placed well above the key-

boards,—a most desirable arrangement, and one which should be adopted in all modern instruments.

I do not propose to give a detailed description for making the keys, for the reason that to turn out a satisfactory job, not only to work well, but—what is just as important—to look well, is an undertaking somewhat beyond the scope of the average craftsman unprovided with the special appliances and knowledge required. Keymaking is a trade in itself, and it is much better to purchase them finished and ready for use. Secondhand keyboards can often be obtained, and if not too much worn can, with a little attention, be made equal to new.

To conform to modern requirements the keys should be of certain dimensions, the chief of which are approximately as follows: length of the naturals or white keys, $5\frac{1}{2}$in.; width, $\frac{7}{8}$in.; depth, $\frac{13}{16}$in. Organ builders always speak of the black keys as "sharps," and these are $3\frac{1}{2}$in. long; $\frac{3}{8}$in. wide; and stand $\frac{1}{2}$in. above the naturals. The distance between the sharps should not be less than $\frac{5}{8}$in. or $\frac{3}{4}$in., as if too close, it is difficult to play extended chords without the fingers jambing between the notes.

Where there are two keyboards, the upper is usually termed the swell, and the lower the great, and in such cases the swell keys should overhang the lower manual not more than $1\frac{1}{2}$in., the distance between the two keyboards (measured from the surface of the naturals) being from $2\frac{1}{4}$in. to $2\frac{3}{4}$in. The total length of the five octave keyboard is approximately 2ft. $9\frac{1}{2}$in., a little more or less according to the spacing of the keys. The depth of touch, or the distance the keys can be pressed down, should not be more than $\frac{3}{8}$in.

In the best quality keys, the naturals are faced with ivory and the sharps with ebony. There are, however, now on the market, one or two compositions for plating the keys which for all ordinary purposes serve almost as well, and have the advantage of not turning yellow. Ivory keys are, of course, the most expensive, the price varying according to the thickness and quality of the plating which is distinguished as No. 0, 2, 3,

and 4,—No. 0 being the best. In any case, the keys should be of good pattern, for nothing is more objectionable to play upon than unsightly or badly fitted keys.

Each row of keys is mounted on a separate frame termed the "key-frame," and this should always be made sufficiently strong to ensure a firm foundation for the keys. This more particularly applies to centre-hung keys, where the pin-rail is often unsupported except at each end and therefore liable to give or spring under pressure of the hands.

For the amateur who is building to some particular design, and wishes the work as far as possible to be "all his own," there are a number of methods by which suitable keyboards can be made up without too great an expenditure of time and money. Finished keyboards, with frames complete, can be, if desired, obtained in a number of sizes from the supply houses at prices according to the length and quality of the keys, and the material with which they are covered. When, however, some less expensive plan is required, an old harmonium can, perhaps, be bought quite cheaply, and the parts used in re-construction work, or second-hand pianoforte keys may be altered in a suitable manner and mounted on new frames, and thus the amateur by exercising his ingenuity can find good material which may be turned to account.

The dimensions of the keyframes will, of course, entirely depend upon the collective width and length of the keys, which may be anything from 9in. in the back-hung keys, to 17in. for the centre-hung variety.

Well-seasoned beech wood is the best material for the frames, although oak or good mahogany will serve equally well. Commercial American organs frequently have keyframes of whitewood or sycamore; but the hard woods are very much to be preferred, not only for their initial strength, but equally so for their damp resisting qualities.

The frame for back-hung keys consists of two end cheeks and two longitudinal rails termed the "back" and "front" rails

respectively, whilst for centre-hung keys a third rail, termed the centre or "balance" rail, is required.

Assuming the keys to be centre-hung, with an overall length of say 17in., a suitable frame will approximately measure 3ft. long, by 1ft. 7½in. wide. For such a frame, the two end cheeks should be finished 1ft. 7½in. long, 1⅜in. wide, and 1in. deep. The front rail 2½in. wide by 1in. thick; the middle rail 1in. or more wide, and 1⅜in. deep, and the back rail 1¼in. wide, and 1in. deep.

The whole should be strongly put together, the various rails being planed perfectly true, and morticed into the end cheeks with the centre rail (which carries the pins on which the keys work) placed about 10¼in. from the front edge of the frame, and with its top surface ⅜in. above the cheeks. Fig. 19 shows the frame with some of the keys in position, and from this it will also be seen that the keyframe is made wide enough to enclose the pallets (6) of the back organ. It will be noticed in Figs. 21

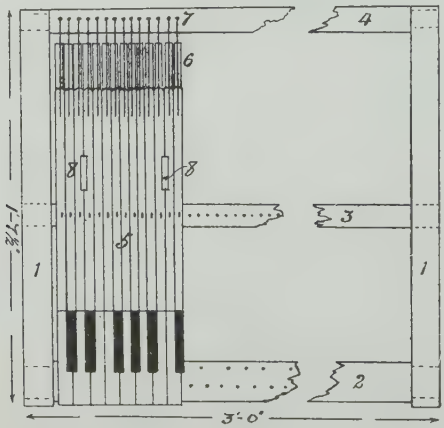

Figure 19. Plan of Keyframe.

and 22 that the centre rail (6) is bevelled on each side at the top so as to clear the underside of the keys, such bevelling being of course made before the rail is fixed.

The frame for back-hung keys (Fig. 20) should be constructed of similar material, but in this case, the front and back rails may be 3in. and 2in. wide, respectively.

When setting out new keyframes, sufficient clearance must

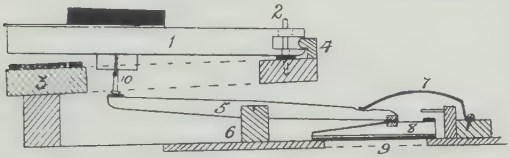

Figure 20

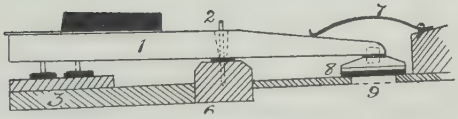

Figure 21

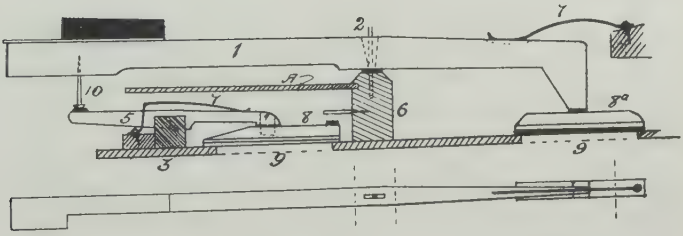

Figure 22

TYPES OF HARMONIUM KEY ACTION

be left between the keys to prevent them touching one another, for which reason a space equal to about the thickness of a visiting card should be left between each.

A set of guide or "steady" pins for the front rail together with a set of oval or "bat" pins for the centre rail will be required for each row of keys, and these must be carefully inserted in the rails so as to correspond exactly with the position and spacing of the mortices in the keys.

The centre pins should project about 1in. above the rail, the guide pins not quite so much. Small felt washers or "punchings" are slipped over the centre pins, and thick baize washers over the front guide pins, before the keys are mounted in position, and the whole must be so regulated as to give perfectly free and silent working without the least shake or spring.

Back-hung keys are prevented from leaving the pins by a stop rail, termed the "back-catch" (4; Fig. 20) which sometimes consists of a narrow strip of felted wood, screwed down over the keytails in place of the "nosing" engaging the mortice as shown in the drawing.

The keys usually fitted to the American organ are very similar to the type illustrated in Fig. 20, except that the screw (10) upon the underside for working the pallet is replaced by a wooden plunger or pitman rod, which passes through the cavity board as shown in the diagram Fig. 14 (2).

For two manuals, the keyframes should be rather heavier in construction,—at all events, for the top row, and especially the centre rail, which ought to be not less than 3in. wide, otherwise the keyboard is almost certain to spring or bend under pressure of the hands.

As previously noted, the distance between the two keyboards (measuring from the surfaces of the natural keys) is from $2\frac{1}{4}$in. to $2\frac{3}{4}$in. and this measurement must be provided for in setting out the keycheeks.

The finished keyframes are mounted one above the other, so the front edge of the natural keys of the top or swell manual

overhang the bottom row of keys for a distance of not more than $1\frac{1}{2}$in. The fronts of these overhanging keys are cut away and shaped as shown in the drawing, Fig. 23, and where this is done the fronts are either veneered with ivory or composition or failing that, finished black and polished.

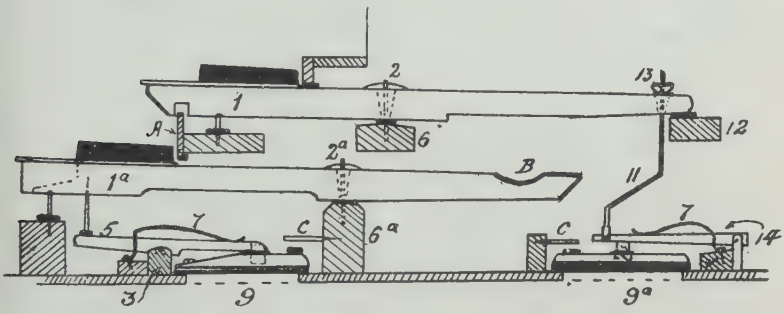

Figure 23. Key Action of Two Manual Harmonium

A narrow strip of $\frac{3}{16}$in. mahogany or oak, termed the "keyslip," is frequently fixed in front of the keys of the upper manual and gives a neat finish to the keyboards. Some players, however, prefer the absence of any keyslip.

It need hardly be said that in setting out the two keyboards, each key in the top row must be in line with and exactly over the corresponding keys in the bottom row.

Both keyframes are made quite separate, and are retained in position one above the other by a couple of hardwood dowels inserted through the end cheeks.

Upon referring to the diagram, Fig. 22, it will be noticed that the centre-hung keys are considerably shaped both in plan and elevation, being cut away upon the underside from a point about $3\frac{1}{2}$in. from the front of the natural key to within a short distance of the mid-pin mortice. The object of this is to clear the

mechanism operating the pallets, but it is not absolutely essential, provided the parts do not touch when the key is depressed to its full extent.

An additional piece is likewise glued to the underside of the extreme tail end, its purpose being to carry the pallet of the back organ, which is connected to it by means of a flexible leather hinge. It will also be seen from the drawing that the keytail is thinned down to ¼in. in thickness, such bevelling being made equally on both sides of the key, and commencing from the mid-pin mortice.

Properly speaking, all the pin mortices should be bushed with thin felt to secure silent action, although it must be admitted that this is frequently omitted.

It should be observed that the upper and lower keys of the double manuals are not only considerably different in length, but also in shape, and all such measurements are, of course, entirely governed by the type and lay out of the action. These matters will be fully dealt with in the course of this chapter, and must be definitely decided before the keys are made.

From Key to Pallet

For connecting the keys with the pallets, a number of different movements are employed, and their setting out is almost entirely influenced by the size of the organ,—i.e., the number of speaking registers and their distribution upon the soundboard or reed pan. Usually the movements are quite simple, though some are more complicated than others, particularly in certain makes of the American organ. Figs. 20 to 22 illustrate three different types ordinarily found in the harmonium, whilst Fig. 14 shows the action generally used in the American organ.

The pallets have already been fully described, and all we are

concerned with at the moment is the method of working them. Harmoniums having only one or two full rows of vibrators are very frequently fitted as shown in Fig. 21, from which it will be seen that the pallet (8) is attached directly to the tail of the centre-hung key so that when the front of the key is depressed the pallet is raised from the pallet-hole (9) to a corresponding degree, the steel spring (7) returning it to normal immediately the finger is removed from the key. This movement is suitable only for the smallest instruments, and the action shown in Fig. 20 is to be preferred for large types. In this instance, it will be noticed that the keys are back-hung, and that each pallet (instead of being raised directly by the key itself) is attached to and operated by a separate lever or "stem" (5). This kind of action, although it brings into play a greater number of working parts is very much lighter in operation than Fig. 21, for the reason that the stem (5) acts as an additional lever, receiving its impetus from a point near the front of the key, thereby being enabled to overcome the resistance of the spring (7) with greater ease, thus making the touch of the keys lighter, and less springy.

The movement illustrated in Fig. 22 is practically a combination of the two preceding ones, and is the kind of action most frequently employed in harmoniums of larger size, or those in which the several rows of reeds are divided to form the back and front organs. The keys are centre-hung, and the balance rail is made slightly deeper to permit the working parts of the front organ pallets to clear the underside of the keys, the latter being cut away for a like purpose as previously described. An extension piece glued to the underside of each keytail carries the pallets of the back organ, whilst the front organ mechanism is operated by the screw (10) inserted in the key-head. From this it will be seen that immediately the key is depessed, both pallets 8 and 8a open simultaneously.

Fig. 22 (a) shows a section of a thin wooden cover board which is generally placed immediately under the whole length of

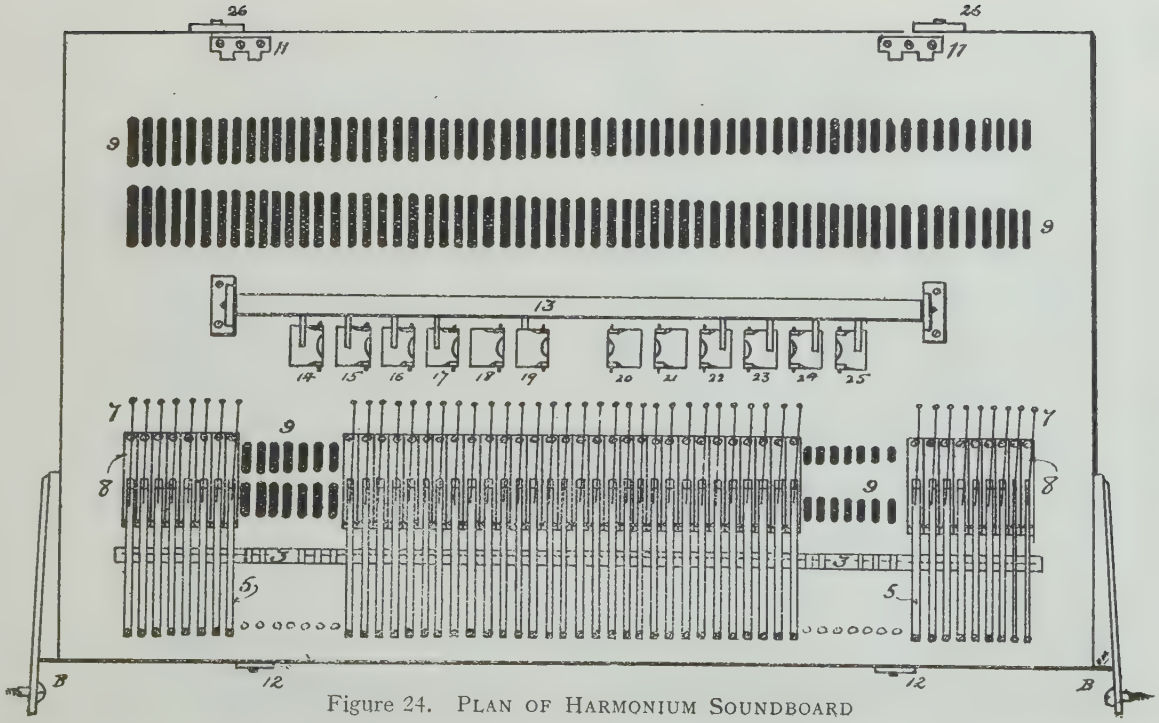

Figure 24. PLAN OF HARMONIUM SOUNDBOARD

the keyboard as a protection against dust and dirt falling between the keys on to the pallet mechanism.

Fig. 24 represents the top of an harmonium soundboard fitted for four or more full rows of vibrators as it appears when the keyframe and stop action are removed. The various parts of this drawing are numbered to agree with Fig. 22, which represents a cross section of the same, but with the keys in position. The keyframe (Fig. 19) is fastened to the back of the soundboard by means of the hinge plates (11), Fig. 24 being held down in front by two small iron catch hooks (12) on the front of the reed-pan, and hidden from sight by the lock rail of the case. Should any repair or adjustment be necessary to the action or pallets, all that need be done is to release these two catches, when the keyframe can be raised upon its hinges, so giving free access to the whole of the pallet board.

Again referring to the diagram (Fig. 24), it will be noticed that the mechanism of the front organ pallets is permanently built on to the soundboard quite independently of the keys, each pallet having its own separate spring. It will also be seen, that whilst the pallet holes (9) gradually decrease in size from the bottom to the top notes, they are set out in such a manner as to require the pallets (8) to be all of the same length. Quite frequently a third row of smaller pallet holes is placed in the treble half between the two back rows shown: particularly when the organ contains a celeste requiring an extra half row of vibrators for the beating rank.

Both the pallets and the "jacks" or "stems" (5) are cut from close grained hardwood such as beech or maple, the pallets being a fraction less than $\frac{1}{2}$in. in width, and $\frac{1}{4}$in. in thickness. They are shaped as shown in the drawings, covered on the underside with a double thickness of sheepskin leather, and are usually from 3in. to 4in. in length. The stems are of a length sufficient to reach from the centre of the pallet to the screw inserted in the underside of the keyhead, and generally measure about $\frac{5}{16}$in. at the widest part (where the centre pin passes

through), and $\frac{3}{16}$in. thick. Each is fitted with a short centre pin upon which it works in a groove in the top of the rail or "stock" (3: Figs. 22 and 24). This rail is also made of beechwood, about $\frac{5}{8}$in. deep, by $\frac{1}{2}$in. wide, and is provided with sixty-one transverse grooves, each slightly more than $\frac{3}{16}$in. wide, $\frac{1}{4}$in. deep, and spaced barely $\frac{3}{8}$in. apart, for the stems to work in. The centre pins, beyond being a tight fit in the cut made for them along the top of the rail, are not otherwise fastened in any way.

The pallets are hinged to their respective keys or stems in the following manner. A piece of soft doeskin $\frac{1}{2}$in. by $\frac{3}{16}$in. is glued between the tail-end of the stem, and the centre of the top of the pallet, and when dry, a $\frac{1}{4}$in. strip of very thin leather—such as is used by bookbinders—is carefully glued over the stem, and down each side of the pallet, so making a very strong and yet flexible connection. A small soft felt or leather punching is glued to each end of the pallets where they strike the pins (C: Fig. 23), and another to silence the screw under the keyhead at the extreme end of the stem, which is also provided with a shallow groove for the end of the steel spring to rest in. When mounted, each pallet is retained in correct register over its pallet hole by phosphor bronze guide pins partly driven into the sound-board between the pallets.

It need hardly be said that all moving parts must be made to work easily and silently without the least shake, the springs being regulated so as to give an absolutely even tension of the required degree, that is not too light, and yet strong enough to close the pallets smartly, and in a perfectly airtight manner. The back pallets are, of course, closed independently by the springs (7: Fig. 22) which rest in shallow grooves cut in the upper surface of the keytails, and the two springs should together be so tensioned as to give a touch at the keys of about $3\frac{1}{2}$ozs.

Fig. 23 shows the usual type of two manual harmonium action, in which the keys of the lower (or great) manual act upon the pallets of the front organ, and those of the upper (or swell) manual upon the back organ. In the drawing, both sets

of keys are centre-hung, and this is the most suitable arrangement when it is desired to fit the swell-to-great coupler. This also accounts for the somewhat peculiar shaping of the keytails (B), a matter which will be dealt with more fully in the chapter on couplers. If the coupler is not required, there is no necessity for the keys of the great organ to extend beyond the balance rail, but of course no two manual is really complete without this indispensable addition.

As the action of the various parts is clearly shown in the diagram, no further description is required beyond the fact that the swell keys operate their respective pallets by short wire trackers (11: Fig. 23) through the agency of the arm (14). These trackers are tapped with a very coarse thread for about an inch at the end, which passes through a bushed hole in the keytail, a leather button (13) being afterwards screwed on for regulating the action.

In regard to the "bushing" of holes in the action work, as a very considerable amount will be required, it may be as well to note here the best method of doing it. A thin felt, termed *bushing cloth*, is sold expressly for the purpose, and all borings or holes in which metal pins or pivots work should be lined with it. To do this quickly and neatly to the very large number required may appear a much more difficult job than it really is. First cut the cloth into narrow strips slightly more in width than three diameters of the hole to be bushed, then having pointed one end pass this point through the hole and draw the strip through nearly to its end, put a touch of glue on the outside of the cloth and draw this into the hole. Push a thin wire through to press the cloth into close contact, and when dry trim off level with the wood on both sides.

It is important to remember that if leather buttons are used for any part of the action it is the rounded and not the flat end which faces the moving part, and that small "cloths" or felt punchings should always be placed between the buttons and the action work as a precaution against rattling. For the same

reason, all moving parts where they touch should be neatly clothed with soft sheepskin leather, as it is only by observing these small matters that a properly adjusted, silent and efficient action can be ensured.

Fig. 25 is a sectional diagram showing the internal arrangement of an harmonium with six full rows of vibrators. It is not intended as an identical reproduction, either as to measurement or form, of such parts as have already been described, but to show as clearly as possible how they are assembled as a whole. For instance, Fig. 24 represents the top of the soundboard as fitted for four full rows of reeds with the stop connections in the centre between the front and back organs, whereas in Fig. 25, this part is drawn with six registers and the stops working from the back. In a similar way, some of the drawings showing parts in plan do not necessarily agree exactly with the same parts shown in section in other illustrations. The reason for this lies in the fact that in the reed organ there are so many alternate arrangements and methods of fulfilling the same purpose, that in order to give the reader an insight into as many of these as possible, at the same time keeping the number of separate drawings within a reasonable limit, it becomes necessary to utilise the various plans and sections in a general manner. In following out this system, however, it is anticipated that no inconvenience will be encountered when using the instructions in a practical manner, and that by illustrating a number in preference to one particular form, their utility is considerably enhanced.

THE STOP ACTION.

EVERY organ of more than a single row of vibrators requires to be provided with some suitable means whereby the different registers may be brought on or shut off at will. This mechanism is termed the *drawstop action*, collectively consisting of a moveable stop-knob or head faced with an ivory or composition label upon which is engraved the name of the register it controls, together with the draw-rod and other various wood and metal levers, traces, and parts forming its connections with the valve for admitting the wind to the reeds, a repetition of this movement being of course necessary for each separate drawstops.

The drawstops are ranged either in a horizontal row just above the keyboard, or grouped together at each side of the manuals so as to be easily seen and manipulated by the performer. Organ stops are of two kinds,—sounding or speaking stops, and mechanical or accessory stops, the former comprising

only those registers having vibrators, the latter consisting of various couplers, *forte* and expression stops. At the moment it is intended to deal only with the sounding stops, leaving the couplers, &c., for a subsequent chapter.

The Harmonium

Harmonium manufacturers usually adhere to a standard arrangement for the drawstops, dividing each speaking stop into treble and bass (at all events for what are termed the foundation stops) so that each complete row of sixty-one notes is controlled by two drawstops. Thus cor anglais in the bass becomes flute in the treble, and so on. When placed in a horizontal row above the keys the drawstops are generally numbered 1 to 4, &c., in the direction from the centre towards each end of the row, with two mechanical stops "grand jeu" and "expression" (also possibly two percussion stops acting on No. 1) occupying the centre, with bass and treble *fortes* at their respective ends. The drawstops in an harmonium with four full rows of vibrators and percussion will therefore appear as follows:—

Forte	Bassoon	Clarion	Bourdon	Cor anglais	Percussion	Grand jeu	Expression	Percussion	Flute	Clarionet	Fife	Oboe	Forte
0	4	3	2	1	1	G	E	1	1	2	3	4	0
	8ft.	*4ft.*	*16ft.*	*8ft.*					*8ft.*	*16ft.*	*4ft.*	*8ft.*	

The above may be accepted as an almost universal arrangement for an harmonium of this size, larger instruments containing in addition such stops as harpe éolienne (a 2ft. bass stop formed of two rows of reeds, one of which is tuned slightly sharp so as to

beat with the in-tune rank, and thus produce a waving effect), baryton (a treble-stop of 32ft. pitch, or two octaves below unison), contrebasse (a bass 16ft. stop sometimes of twelve notes only), voix céleste (a 16ft. treble stop with double reeds), and so on.

It will be noticed upon referring to the sections Figs. 17 (p. 59) and 25 (p. 89) that the top of the windchest is covered in by a thick board termed the *bellows board*, and this is now shown in plan in Fig. 26 (p. 91). The outside frame of the reed pan, as well as the divisions forming the reed chambers, bed down on to the upper surface of this bellows board, the whole being rendered absolutely windtight by a cushion of soft leather or plush termed the "wad" glued upon the bellows board, as shown in the diagram. The top surfaces of the windchest sides are likewise covered with sheepskin so there shall be no escape of wind when the bellows board is screwed down and the compressed wind from the windchest is thus able to enter the reed compartments only by way of the valves (10) Figs. 25 and 26, the purpose of the stop action being to open and close these valves.

With the exception of some small details, the majority of stop actions are very similar, and it will therefore be sufficient to describe two of the most usual forms. The first of these is shown in drawings Figs. 25 and 26 (10 and 10a), the movement being as follows. Upon pulling out the drawstop (11) the rod to which it is attached moves forward, taking with it the upright lever (which, by the way, is sometimes made of metal and sometimes of hard wood, usually about 4in. long) whose arms it will be noticed are of unequal length, and set at a slightly obtuse angle. The lower arm of this lever slides upon and thereby forces down a small square metal plate or "stage" hinged to the upper surface of the soundboard at the back of the reed pan. Engaging the underside of the stage is a metal or wooden pin, termed a "plunger," working in a vertical hole bored down through the frame of the pan, and this plunger in turn pushes

down the upper arm of the small metal square causing it to partially rotate, so drawing upon the adjustable steel wire trace connecting it to the bellows board pallet (10). When the stop is pushed in the pallet is closed and the action returned to the position shown in the drawing by a stout steel wire spring (not shown in Fig. 25), but screwed to the bellows board so as to engage the pallet.

The second type of stop action as used in the Alexandre and similar harmoniums is practically the same as far as the hinged stages. In this case, however, the plunger forces down a flat metal arm about 1½in. in length attached to a ¼in. steel spindle. These spindles work at right angles across the width of the bellows board, and thus transmit their motion laterally. (See D, Fig. 26). They are made long enough to reach their respective pallets where a second arm engages the small T shaped fitting (C) shown in the diagram Fig. 26, and as both arms project in line from the same side of the spindle, it follows that a downward pressure of the plunger upon one produces a similar motion in its fellow. The spindles are not attached to the bellows board itself, but revolve in holes (fitted with sheet metal bearings) bored through the divisions between the reed chambers upon the underside of the reed pan. The dotted lines (D) on

EXPLANATION OF FIGURE 25

(1) *Windchest*
(2) *Reservoir*
(3) *Feeder*
(4) *Foot Treadle*
(5) *Rocker*
(6) *Wind-trunk or Chimney*
(7) *Bellows Spring*
(8) *Expression*
(9) *Exhaust Pallet*
(10) (10a) *Stop Valves and Action*
(11) *Drawstop*
(12) *Swell or Forte*
(13) *Key*
(14) *Reed Cells*
(15) *Reed Pan*
(16) *Pallet of Front Organ*
(16a) *Pallet of Back Organ*

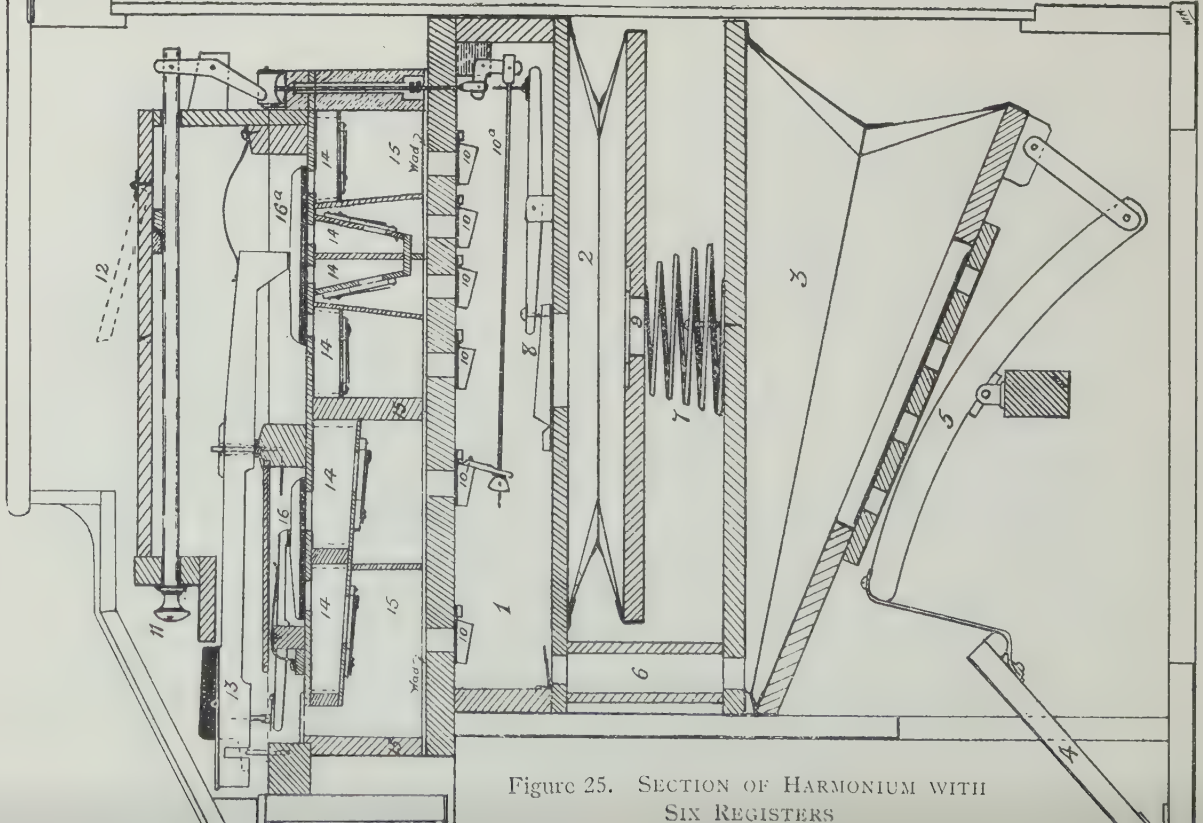

Figure 25. SECTION OF HARMONIUM WITH SIX REGISTERS

the plan are simply to show the position in which the spindles and their arms would be placed. The action is returned by the steel wire spring (E, Fig. 26).

In some harmoniums this type of action is worked from the back of the soundboard, whereas in others the plungers pass the centre of the reed pan, in which case the hinged stages are placed between the pallet holes on the upper surface of the soundboard as shown at 14 to 15, Fig. 24.

Again referring to the bellows board it will be noticed that a small pilot valve is placed close to each of the main pallets. These valves, which are more clearly illustrated in the enlarged section (F, Fig. 26), cover a $\frac{1}{4}$in. or $\frac{3}{8}$in. boring through the thickness of the bellows board as indicated by the dotted lines (G) and are worked from the pallets by short plungers so that as the pallets close, the pilot valves open, the object being to carry off any unbidden leakage of wind which might otherwise cause some of the reeds to cypher.

The apertures for the valves in the bellows board are generally about 8in. long and $1\frac{1}{2}$in. wide, the pallets being made of $\frac{3}{4}$in. stuff with sufficient overlap to render them absolutely windtight, and for which purpose they are also faced with a good thickness of soft sheepskin leather. This leather facing is cut rather longer than the pallet so as to leave a piece to form a hinge at the tail end, and by this the pallet is secured to the underside of the bellows board, a couple of strong wire guide pins retaining them in correct register. (See section A B, Fig. 26.)

For the type of action shown in Fig. 25 in which squares and tracker wires are employed, the bellows board pallets are hinged along one side and not at the tail, and the springs arranged accordingly. The squares are pivotted to small wood blocks or metal angle pieces screwed to the underside of the board, and the whole requires to be exactly adjusted before the bellows board is screwed down over the windchest.

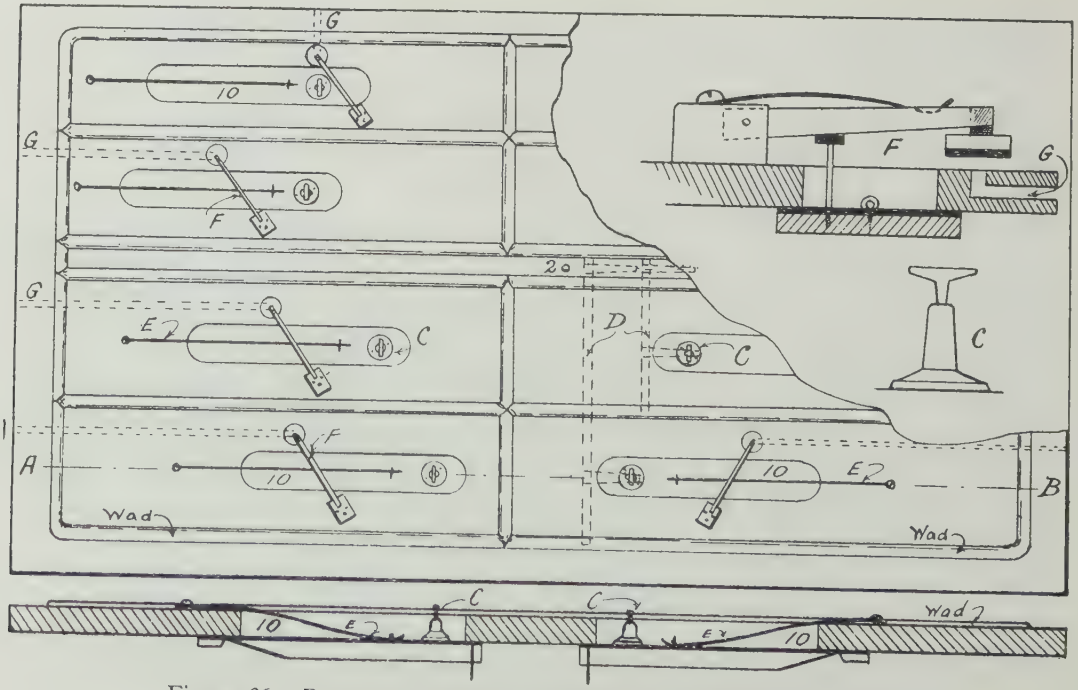

Figure 26. Plan of Bellows Board with Section, A B., &c.

The Reed Organ

The reed organ working on suction wind necessitates a totally different kind of stop action, as the valves are required to prevent air from the atmosphere being drawn into the reed cells instead of cutting off pressure wind from the bellows, as in the harmonium. In this type of instrument, each reed is isolated in its own cell or cavity, and on referring to Fig. 5 it will be noticed that the mouth of the cell is shaped to a slightly oblique angle, and that the stop valve, or "mute" as it is termed, is hinged at the top to the cavity board in such a manner that (when the draw-stop is in) it closes down over the mouths of all the reed cells of the particular register which it controls. With divided stops, there are two of these valves to each complete row of vibrators, that which covers the two bass octaves being usually about 12in. long, and the one for the three treble octaves 20in. With stops running through the full compass of 61 notes, a single mute for the whole is all that is required, although even in such cases it is very usual to make the valve in two lengths with a flexible connection between (for working them together from a single draw-stop) as two short valves are less liable to twist than one long one.

The mutes are made of pine or other light wood about ¾in. wide, and faced with soft felt or sheepskin leather to make them windtight, the hinge along the top being frequently simply a strip of tosh glued on. In some instruments this is replaced or supplemented by two or three metal hinges, and these are much to be preferred as they enable the mutes to be easily removed and replaced should occasion require.

The mutes are forced in an airtight manner against the mouths of the reed cells by two or more steel springs of No. 22 steel wire 7in. or 8in. long. The ends of these springs are pointed and bent over at a right-angle for about ½in., one end being forced into the top of the cavity board, and the other

into the front of the mute in such a way that the body of the wire is twisted upon itself, and so snaps the valve closely over the mouths of the cells. (See 2, Fig. 27, p. 94.)

Arrangements of the stop action itself are almost without number, but all of them are made up of cranked wires or metal levers and various traces or connecting rods. Usually the draw-stop action is built into a kind of shallow tray resting upon the cheeks of the key-frame and which can be quickly removed from the organ by taking out one or two screws. In others more complicated, the traces and other connections must be dismantled before the action can be removed. The less number of moving parts there are, however, the better.

As a rule, the drawstops are arranged in a single line above the keys, although in modern reed organs (especially those with more than one keyboard) they are sometimes placed in vertical stop jambs at the side of the console.

Each drawstop is attached to a "stop-stick" (3, Fig. 27) or rod of polished wood from 10in. to 15in. long which slides to and fro in bushed holes in the stop jamb (4) or the board in front and a register or guide board (5) at the back. A stout wire pin (6) run through the rod prevents the stop drawing too far, a travel of not more than 1in. being quite sufficient. Another wire (7) works in a felt-lined saw-cut in the back guide bar and keeps the stop-rod from swivelling upon itself.

The front jamb and the back guide bar are fastened parallel to one another on a board of $\frac{1}{2}$in. whitewood about 8in. wide in which a number of grooves $\frac{3}{16}$in. wide and deep, are ploughed along its length about $\frac{1}{2}$in. apart. (8, Fig. 27.) Cranked wires of $\frac{3}{16}$in. iron or steel wire (9) connecting the stop rods with the traces or other connections for working the mutes lie in these grooves, in which they are retained by two or more small hardwood buttons.

Stop actions may be roughly divided into two classes, "end actions" or those working round the body of the organ, and "direct actions" which operate through the mechanism of the

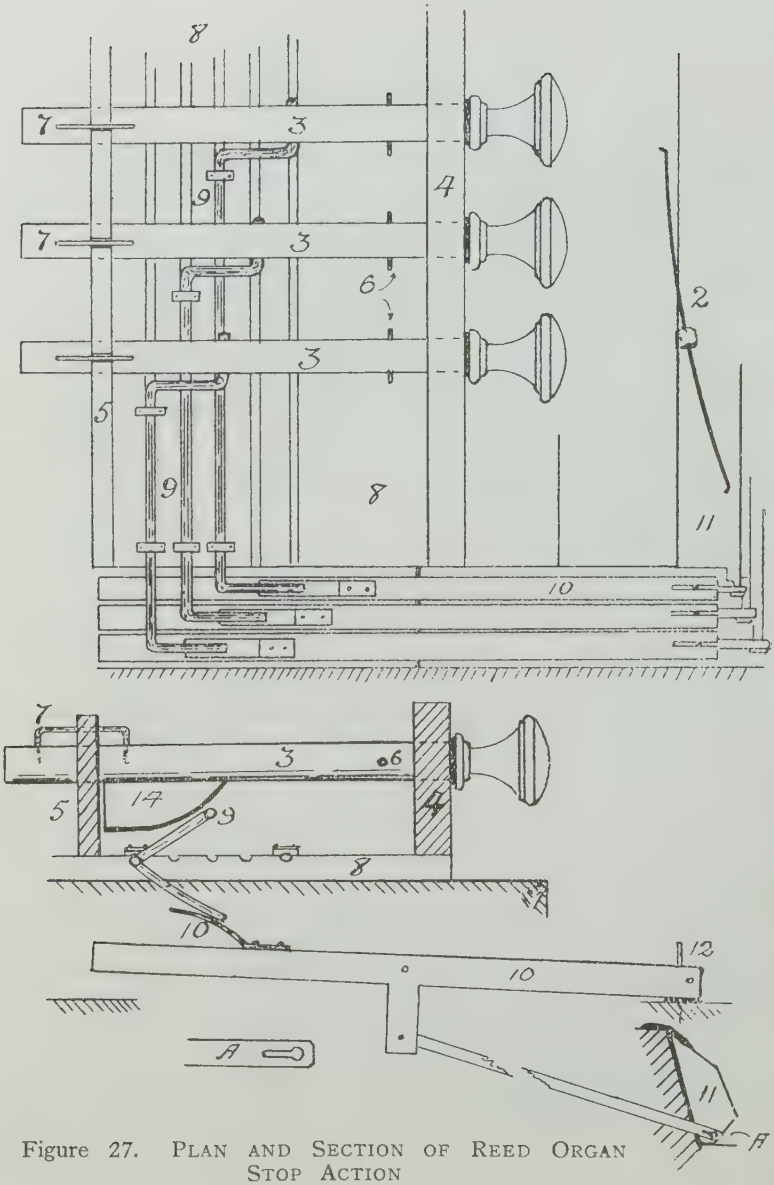

Figure 27. Plan and Section of Reed Organ Stop Action

instrument by means of wires or rods under the keyboard. Both kinds have some disadvantages: end actions being a little difficult to set up as there is generally no means of regulating except by bending the metal connections. As a rule, however, they are more get-at-able, and being composed of wooden rods or levers working on metal pins or wires, are less liable to rattle than direct actions, which are frequently made of iron wires working against one another.

Fig. 27 illustrates in plan and section one type of end action, from which it will be seen that the drawrod (3) is fitted underneath with a wooden fin or incline (14). The front edge of this fin is clothed with soft leather, and when the drawstop is pulled forward engages the cranked end of the wire (9) forcing it down. In turning, the arm at the opposite end comes in contact with the curved metal arm of the rocking lever (10) by which the downward motion is continued. A short vertical arm attached to the underside of this lever carries a light wood or metal trace to the bottom end of the mute where it is pivotted, the mute being thus pushed open as soon as the lever begins to fall. The rocking levers (10) are arranged according to the number of stops, so many at each side of the keyframe, and are kept in line by a stout wire guide or steady-pin working in a slot as shown at (12). The trace rods are required only for the purpose of *opening* the mutes, the *closing* being effected by the springs (2) as soon as the drawstop is pushed in, and they are therefore made with a slot widening into a round hole to enable the end to be slipped over the head of the metal pinion screwed into the end of the mute. In some actions the traces are of stout wire, having a short piece at each end bent to a right-angle. These ends are then inserted either into a bushed or plain hole in the arm of the mute, and held in place by a small wood turn button.

Fig. 27 is not a scale drawing of any particular make of stop action, but is intended as an illustration to show the use of parts ordinarily found in everyday use.

In direct actions the drawstops usually work short vertical levers, the bottom arms of which are either behind the keytails or pass through slots cut between them. Lengths of steel wire, screwed at one end with a coarse thread and fitted with a leather button for regulating purposes, pass between the key plungers and connect the levers with short wood or metal arms attached to the mutes.

The number of different methods for accomplishing the simple operation of opening the mute are so numerous that it is impossible to mention them all. For instance, the fin (shown in the drawing *underneath* the stop rod) is also just as often found either on top or at one or other side, sometimes made of wood, sometimes of steel wire, or in the form of a curved metal arm, or again, replaced by a leather covered wooden peg. Many actions are almost entirely made up of light metal rods bent to various shapes, but generally speaking, wood working against metal is better than metal to metal, and in any case all the bearing surfaces should be well protected with leather to prevent rattling. The same remarks apply to drawstops in vertical stop jambs, and anyone setting up such an action should have no difficulty in arranging a suitable movement.

It may be mentioned that the cavity boards do not necessarily always lie under the keyboard, but are also quite frequently placed on edge in a vertical position at the back of the organ case, — a combination of both being found in some larger instruments.

PLANNING THE ORGAN.

THE conclusion of the previous chapter brings us to a point where it perhaps will be advisable to leave for the moment further constructional details until such time as we have considered the manner in which it is intended to erect and complete the organ. To some extent this part of the work has been purposely delayed for the reason that in order to make the subject plain to those having little or no knowledge of reed organs it was necessary to first illustrate the general working arrangements. This has now been done, and although in a short treatise it is impossible to enter fully into every small detail, enough has been said to afford the reader a very fair insight into the construction. The pedal organ, the various couplers, and other accessory movements will be dealt with in a later chapter.

Those of my readers who have read the previous chapters with a view to building an organ for themselves will no doubt wish to have some idea as to the manner in which the proposed instrument can be set up to the best advantage, and in the pre-

sent chapter I therefore intend to discuss one or two matters and offer some suggestions bearing on this part of the subject. The problem of planning an organ to meet fully all requirements is one calling for considerable care and attention to a number of important points if the best results are to be obtained, assuming, of course, that the intending builder is desirous of possessing something different from the commercial type of harmonium or American organ.

One of the first things to be thought of is the situation in which the instrument is to be used, and whether it is to be permanently built into some particular part of the room or studio, or to be self-contained in its own case after the manner of the majority of reed organs. Many, probably, will have no option but to adopt this latter course, either on account of the want of a suitable fixed site, because only a small organ is contemplated, or it is required to be easily moved about. Most rooms, however, have some kind of shallow recess, and very effective schemes can be carried out by building the organ into one of these, and covering in the front with neat, organ-like case-work. The cost of doing this need not be much, if any, more than the orthodox type of case, as quite frequently nothing more than a front will be necessary, the walls of the recess forming the sides and back.

The next consideration is the purpose for which the instrument is required, whether as a practice organ for the professional or student, or simply for ordinary home use. To be of any real service to the student, nothing less than a two manual and pedal organ is of practical utility. This does not necessarily mean that it must be large, or that many registers are required; and two or three nicely voiced stops on each manual will be sufficient for the purpose. The real necessity is for the key-boards and other console arrangements to conform as closely as possible to accepted pipe organ standards, and this is a matter which on no account ought to be overlooked, for not only does its observance remove one of the most serious obstacles to legitimate organ

study, but quite apart from the requirements of professional use, there is no practical reason why so desirable a standard should not be applied to the building of all modern reed organs.

The inspection of some good organ consoles will elucidate matters, and show what is required better than pages of written instructions, but at the same time it will be as well to enumerate some of the more important points. First of all, as to the position of the manuals. The top row of keys in a two manual is the swell, and the bottom row the great organ. With three manuals the third row is termed the choir organ, and placed below the great. Actually there is no absolute standard for the different measurements connected with the keyboards, which will be found to vary slightly in different instruments.

The keys of a single manual organ are usually placed about 32in. above floor level, and in a two manual the distance is from 29½in. to 31½in. measured from the surface of the great organ keys to the top of the centre natural key of the pedal board. Where there is no separate pedal board and the organ is blown by foot treadles, sufficient height must be allowed between the floor and the underside of the lowest manual to prevent the knees striking the keyframe.

The front of the ordinary harmonium or American organ is almost flat, and the keys project very little if at all beyond the front of the case. It is much better, and more in keeping with present-day procedure, to let the manuals overhang the front of the case 10in. or 12in.

In anything larger than a single manual the stops should be grouped in vertical stop jambs placed left and right of the keyboards, and set at an angle of 45 degrees or 60 degrees. The drawstops are ranged in a double line, or where there are very many, in a triple line, usually about 1¾in. to 2in. centre to centre, and here again orthodox order should be preserved, the great organ stops being always on the right; those of the swell on the left; couplers on the left; pedal organ on the left; choir organ on the right. The "swell-to-great" and "great-to-pedal" couplers

can if desired, be duplicated on the right. The drawstops themselves should be of correct organ pattern, and placed in proper sequence of pitch commencing with 2ft. stops at the top, down to 16ft. stops at the bottom; pedal stops in like order below the manual stops, and finally the couplers. The tremulant on the swell is, however, frequently placed at the top of the left hand jamb, and where the stops are named in pipe organ nomenclature "reed" stops should be placed above "flue" stops.

All speaking registers ought to run through the full compass of 61 notes, and not be divided into bass and treble except perhaps for the bass octave of a single manual, where it has to do duty as a common bass for more than one stop extending only to tenor C. In any case, it is not a very desirable arrangement, and it is much better that every row be complete and have its own bass.

The next consideration will be the most suitable form of building frame or similar structure upon which to erect the bellows, soundboard, and parts of the mechanism, and it need hardly be said that as this is the foundation of the whole organ, every part of it must be strongly and substantially put put together. A ricketty building frame spells ruin to any future action-work regulation.

Very small organs contained in their own case do not, of course, require any separate building frame, the sides of the case serving a dual capacity by supporting the internal parts. The majority of commercial reed organs are constructed in this way. The builder of one organ, however, is unhampered by restrictions, and in an instrument of any but the smallest size the working parts ought to be quite independent of the case, — all panels of which must be easily removable for repairs or adjustment to the interior. It is a pity the majority of makers do not give a little more thought for the repairer before they glue and screw their actions into the case so as to make even a small repair (such as the replacement of broken webbing on the blower) an impossibility without dismantling

the whole organ, and generally half the case as well. A removable panel below the keyboard would obviate much waste of time. In setting up our building frame, therefore, we must bear in mind "accessibility," remembering that the best regulated organs require adjustment sooner or later.

One other point in regard to the position of the soundboards is, I think, worthy of more consideration than is usually accorded it. In the vast majority of reed organs, and particularly harmoniums, the sound-producing parts are placed below the level of the keys, a position in which it is difficult to see how they can be expected to give the best results. It is true that with the soundboards in this position it is possible to use a very simple form of key action which, in such cases, generally consists of a thin wooden plunger 3in. or 4in. in length working direct from the key to the pallet. Nevertheless, it is doubtful whether a more undesirable position could be found for the reeds, for buried as they are right down in the body of the organ, the sound has little chance of uninterrupted egress, the tones quite obviously coming from under the hands,—a similar feeling to that engendered when playing upon a very small chamber pipe organ, where the organist "sits among the pipes."

Another difficulty with the soundboards in this position is the provision of an efficient swell. Ordinarily this department is composed of two or more rows upon the back of the same cavity board holding the great organ reeds, and what with "forte" and "dolce" stops (which are generally simply additional mutes), the swell of the average reed organ is more or less a make-believe. It is rarely fitted with more than a single flap or shutter, the effectiveness of which is further destroyed by openings left for the working of the stop action. There are one or two well known makes in which the cavity boards are placed in a vertical position at the back of the case, and in these the above defects are much less apparent, but even so the swell is far from being efficient.

Provision should therefore be made for placing the sound-

boards clear of any obstruction likely to interfere with the proper sounding of the reeds, for which reason they ought to be raised well above the keys, even as much as shoulder high when possible.

The great and swell soundboards must be quite separate and placed on different levels, the great above the swell, the swell section being completely enclosed in a box fitted with efficient shutters of the louvre type, made so as to remain open to any desired extent. The less the great organ reeds are obstructed the better they will sound.

As to the best type of reeds to use, sufficient has already been said in a previous chapter, and the builder must therefore decide which are most likely to suit his purpose. There is no reason why both harmonium and American organ reeds should not be used together in the same instrument. American organ reeds can be used on pressure wind if the tongues be slightly depressed in the frames.

With this rough idea of requirements in mind, we will now proceed to put them into a practical form. It is, of course, difficult to lay out a plan which will please everyone, as there are several alternatives which could be just as well followed, and the one to be described is, therefore, only put forward as a suggestion open to alteration as required.

For the sake of illustration, let us assume that it is proposed to erect the two manual and pedal organ as specified at No. 1 on p. 24. A likely situation for it will be a shallow alcove or recess such as is found in many rooms, and measuring roughly about 5ft. to 6ft. long, by 1ft. 6in. deep. As our instrument requires a depth of somewhere about 2ft. 6in., the the casework will, when the time comes, have to be built out sufficiently to enclose such of the parts as may project beyond the recess. The addition of a separate pedal board is bound to take up a considerable amount of room, but to economise in this direction as much as possible, it will be found that when making this pedal board there are one or two alternative meas-

ures which can be adopted. Thus, those who wish can either have the full-sized pedal board, or one fitted with shorter keys (preserving, of course, the proper degree of radiation), and made removable so as to be entirely out of the way when the organ is not in use.

Fig. 28 shows the general details of the building frame. There is no necessity to make this frame cumbersome or massive, and if it can be constructed so as to be easily dismantled so much the better. In any case, however, it must be strong and absolutely firm. As will be seen upon referring to Fig. 28, it consists of an oblong framework made up of four posts or uprights (which should not be less than about 5ft. high) connected by a number of horizontal rails and cross bars, all of which, with the exception of the front and back rails which are to support the keybenches, can be of 1¼in. by 2in. yellow deal. The exact length of these various rails will depend upon the dimensions of the bellows, as well as of the sound-boards, although these latter being generally less in area than the bellows need not be considered at the moment.

If the pressure bellows have been made as already described in the chapter on bellows, and to such dimensions as are usually employed in fairly large harmoniums (they will measure roughly about 4ft. by 1ft. 9in.), it will be necessary to make the end cross bars about 2ft. long. One such bar should be placed at the extreme top of the uprights, and two similar bars at a distance of not less than 18in. from the floor leaving between them a space equal to the thickness of the middle board of the bellows. It is quite unnecessary to mortice any of these rails into the uprights; in fact, it is better not to do so, but to cut a simple shoulder on the ends of each cross piece, when they may be fixed to the uprights either with ordinary wood screws or with short bolts and nuts. Unless the front and back rails (A B) are of oak or other hard wood, they should not be less than 4in. wide, otherwise they are liable to give under pressure of the keys. The two boards (C D) or key benches are screwed on top of the

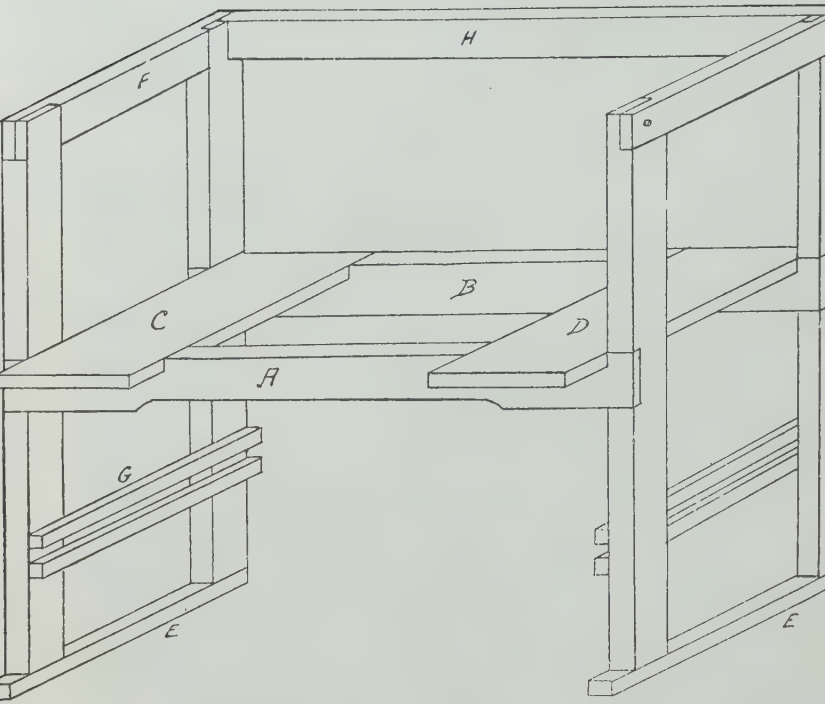

Figure 28. The Building Frame

front and back rails for the purpose of supporting the key frames where they project in front of the case. For the time being, their front ends may be left plain till it is decided how the case is to be finished. To make a firm job of the building frame, it is desirable to fit the two sole bars (E E) by means of which the whole may be screwed to the floor, thus preventing any movement or vibration.

Where it is decided to employ suction wind generated by an

exhauster of the orthodox type, some slight alteration in the building frame will be necessary. Upon referring to Fig. 4, it will be seen that the apparatus (which, for convenience, we will term the bellows) is fixed in a more or less vertical position in the body of the organ, and for this purpose a couple of strong longitudinal bars of timber must be secured, one beneath the key benches, and one either on or immediately above the sole bars. A certain amount of clear space must, however, be left between the floor and the bottom edge of the bellows frame to allow for the passing of the pedal organ action work.

The suction wind type of bellows can be made in a number of different forms; for instance, the two exhausters will sometimes be placed in the front of the reservoir and opening at the top, this form being most generally favoured when the blowing is effected by foot treadles. In others, the exhausters are placed at the back, opening either at the top or bottom as may be convenient. In the ordinary way, the type illustrated in Fig. 4 will be found most generally useful, as it enables foot treadles to be fitted without any troublesome connections. This type of bellows also considerably facilitates the placing of the sloping front panel or fall frequently seen beneath the manuals. It will be seen later that where foot treadles for blowing are installed in conjunction with the pedal board it is a great convenience (and, in fact, almost a necessity) to make it possible for the foot blower to fold into the case, the bellows being then worked either by an independent hand blower or by some mechanical means such as electricity or water. A number of firms who specialise in organ blowing equipment now supply small motors suitable for reed organs, and they are comparatively reasonable in cost and upkeep.

After setting up the building frame, it will be as well to complete the bellows, as these, when firmly screwed in position in the frame, will materially add to the stability of the whole structure.

For those who wish to build their organ into a self-contained

case, a somewhat different procedure will be necessary, and the builder must decide how far he will make the interior of the case itself do duty as a foundation on which to erect the internal parts of the instrument. One of two courses can be followed. Either the ends of the case can be first designed, and when worked up from some suitable hard wood, such as oak or mahogany, erected on a substantial oblong frame to form a base upon which the remainder of the organ can be built. Suitable bars of well-seasoned timber would next be put in to serve as the front and back rails for the manuals to rest on, the various ledges to support the bellows, soundboards, &c., being afterwards screwed on the inside, and the remainder of the case added after the completion of the internal mechanism. Here again, so much depends upon what the individual has in mind that it is almost impossible to lay down any hard and fast measurements: some, no doubt, liking a case having an imposing appearance, others wishing to make the whole thing as small and compact as possible.

One good way out of the difficulty is to obtain and work to a photograph or drawing of some suitable organ console. Quite a number of such photographs (which with a little modification would lend themselves very readily to such reproduction) appear from time to time. Naturally, the whole of the organ front is not required, but simply that part which immediately surrounds the console. Many pipe organ detached consoles are much like large reed organs in appearance, and would form a good model from which to work. In point of size, such a case ought to measure something like 5ft. 6in. long, 2ft. 6in. to 3ft. in depth, and about 4ft. 6in. to 5ft. in height.

The second plan is to make each end of the building frame in the form of a hollow wind trunk, about 1ft. 2in. by 3in., fitted with cross bearers to support the bellows, cavity boards and other parts. Where this is done, however, the frame should be made to fit exactly the interior of the case, so that the addition of a few easily removable screws would

practically make the whole into a single structure, at the same time giving every facility for effecting repairs or adjustments.

After fixing the bellows in one or other of the ways suggested, some form of blowing apparatus must be installed, and for those who can afford it, electricity or water power is an ideal way out of the difficulty. Failing these, either hand or foot blowing (or both) must be provided for. For the horizontally placed bellows with diagonal feeders, a usual and very simple plan is to use a "rocker" under each feeder as illustrated in Fig. 25. The rockers are made from beechwood or oak, and centred on strong iron pivots on the top of a massive bar of timber, generally about 3in. or 4in. square, and placed as shown in the sectional drawing. A short hardwood trace, having a fork at each end, connects the back end of rocker with a block on the underside of the feeder, and a length of strong webbing the front end to the foot treadles. The correct placing of these latter is of some importance, especially when it is intended to have a separate pedal board. It is not then desirable that the foot treadles project beyond the front of the case as shown in Fig. 25, nor is it necessary for them to be made so wide as found in the average harmonium, nor should they be covered with anything so unsightly as pieces of carpet. The neatest plan is to make them perfectly plain, in oak, about 5in. wide, and if they are to be faced with anything at all, to use the rubber matting as sold for the purpose, or a good quality plain brown cork lino. Similar foot treadles can be used for the vertical type suction bellows of which a section is shown in Fig. 4.

Before fitting up the blower, however, I would advise the amateur to examine foot treadles fitted to some of the player-pianos, as there is no doubt that this type presents a far neater appearance than any other, being also made to fold into the case when not in use. With a little care, no difficulty ought to be found in fitting up such treadles, and they can be purchased at one of the supply houses dealing in player fittings.

If a separate hand blower is required in addition to the foot treadles, it must be fitted so as to work through one end

of the case, and it should be possible to easily disconnect the foot motor whilst the blower handle is in use. For the same reason, the handle is usually made to take off or slide into the case.

In regard to the soundboards (which term will hereafter signify the cavity boards, reed pans, or other such parts as are intended to contain the reeds or vibrators), sufficient has been said about the actual construction to enable anyone to make one suitable for the work in hand. Probably the most compact form of soundboard is the cavity board found in the so-called American organ, in-as-much as the various stops or rows of reed cells are placed one above the other, and all worked by one set of plungers in direct connection with the keys of the manual or manuals. As the reed cells are also placed back to back, the greatest width of such a soundboard for six or eight full rows need not be much greater than the combined length of the two lowest 16ft. stops, or one 8ft. and one 16ft. (as the case may be), say approximately 10in. over all.

Mere saving of space is not always everything in successful organ building, and unless absolutely necessary, it is better not to place any part of the soundboard under the keys. To avoid doing so is, fortunately, a simple matter, and assuming that the cavity boards have been purchased complete with the various rows of vibrators voiced and tuned (a course strongly recommended to the amateur lacking the necessary skill in reed voicing) they may be just as easily placed above the keys. For this purpose, bearers sufficiently strong to take the weight must be screwed to the rails F H, Fig. 28.

When received from the makers, the cavity boards or reed cells will be found glued upon the surface of a wide board of $\frac{3}{8}$in. pine, in which the pallet holes have already been cut, together with the borings for the plungers. This board will ultimately form the top of the windchest for which, having decided upon the finished width of the soundboard, it will be necessary to make a shallow tray about $1\frac{1}{2}$in. or 2in. deep, and

the same length and width as the soundboard. The windchest thus formed is connected to the reservoir of the exhauster by a suitable windtrunk, and the soundboard (having been previously fitted with its pallets) is screwed down upon the sides and ends of the windchest, taking care to first glue strips of sheepskin on the edges to make every joint perfectly airtight.

Provided that everything has been properly made, and there is no leakage of wind either at the pallets or joints of any of the connections then, upon working the foot treadles, every reed should give a true note as the respective pallets are opened. A suitable stop action made on the lines already laid down will be required to control the various rows of vibrators.

For the two manual organ, two separate soundboards, each having its own key action and independently connected with the exhauster will be necessary, that for the great being placed above the one for the swell, which must also be fixed so as to enable it to be entirely enclosed in a swell box.

Whilst on the subject of these cavity boards, it will, perhaps, be as well to recall that quite frequently one row of vibrators is made to do duty as two separate stops, as for instance, when the diapason also supplies the dulciana. Although a practice to be condemned when carried to excess, there is no reason why one stop should not be thus acted upon, or, as it is termed, "borrowed," all that is required being a drawstop labelled "dulciana," so arranged as to open the mute of the diapason reeds only just sufficiently to enable them to sound quietly. As the drawstop for the "diapason" opens these same reed cells to their full power it will be seen that when this stop is in use drawing the dulciana adds nothing to the build-up or tonal qualities of the instrument.

American organ reeds on suction wind give a more organ-like quality of tone, although not so powerful as harmonium reeds on pressure wind. Some builders will, however, prefer to use harmonium reeds, and this they can quite easily do, except that more room inside the organ will be required to

accommodate the two soundboards if it is desired to make use of the harmonium type of reed pan. As it is not possible (as far as I am aware) to obtain reed pans commercially in this country, the amateur will either have to make them or endeavour to get suitable ones from an old harmonium. These can often be bought quite cheaply, but before the pan in its original form can be used for our present purpose, it will be necessary to make some alterations owing to the fact that in most harmoniums the key action consists of two separate pallets placed on the top of the pan and worked respectively off the front and back of the key tails (see Fig. 25). If we wish to raise the whole of this part of the organ *above* the keyboards, the most simple plan will be to reverse the pan so that the pallets are underneath; to replace the former keys with jacks or levers long enough to operate both pallets, and working the whole by suitable action from the key tails. The windchest (which, in its new position, will now be on top instead of below the pan) will need to be built up so as to contain the valve board with valves (G G, Fig. 17), and if the bellows are made as shown therein, a new cover board without any valves must be fitted in its place.

A wind trunk with an internal diameter of not less than 12in. by 2in. must afterwards be arranged so as to convey the compressed air from the bellows reservoir to the windchest above the reed pan. The whole of the parts must be made so that they can easily be opened up to give access to the vibrators, and all joints made perfectly windtight by facing with soft sheepskin leather before screwing together.

With this suggested rearrangement of the soundboards, the stop action will necessarily have to be entirely re-planned, but being very simple and similar to that already described, no difficulty will be experienced in getting it to work well.

By using one or other of the soundboards already described, the builder is practically restricted to one particular kind of reed, either harmonium or reed organ, as the case may be. On the other hand, if he adopt a soundboard such as shown in Fig. 13,

it will be possible to use both, so that the diapason, principal and similar smooth toned stops might be composed of reed organ reeds, and the more powerful and keen registers such as gamba horn, oboe, &c., of narrow-tongued harmonium reeds, all speaking on the same weight of pressure wind. It is, of course, possible with careful scaling and voicing to get several distinct qualities of tone from one class of reed; but in the ordinary way there is far too little real difference in the quality of the stops in the average reed instrument, and therefore anything which adds to the resources of the builder in this direction is worth taking advantage of. Furthermore, in this particular type of soundboard the reeds are very easy of access, and the soundboard itself can be placed either in a vertical or horizontal position.

The reeds are mounted by screwing them down over their respective apertures in the soundboard as in the harmonium, for which purpose the frames of all harmonium reeds are provided with a small notch at one end, and a drilled hole at the other. American organ reeds being constructed to fit into grooves in the reed cell are not so made, and therefore, if it is intended to screw them into the soundboard, a small hole must first be drilled in each end of the frames to take the screws.

It will be found that when these American organ reeds are fastened to the soundboard reed side up, the tongues will require to be pressed down very slightly below the edge of the frame before they will speak properly on pressure wind. In the case of harmonium reeds, which usually have much thicker frames, it is better to plant them in a reversed position, that is with the vibrator underneath, provision being made to ensure the tongue room to vibrate freely without touching the sides of the aperture in the soundboard.

After fixing all the reeds upon the soundboard (Fig. 13) the reed chambers formed by the divisions between the registers must be roofed in with airtight cover boards, in each of which several ¾in. holes are bored in line and covered with hinged and leather-faced mutes operated by the drawstop action. Steel wire

springs (as shown at 2, Fig. 27) must be suitably placed so as to close the mutes in a perfectly airtight manner, so that directly the drawstop is pushed in, that particular register is prevented from sounding. As the reeds (particularly the smaller ones) sound very easily, it will be advisable when fitting up the stop action to provide, in addition to the stop valves, a small valve or pallet admitting wind from the bellows to each of the stop chambers, such pallet to open only as the main stop valve closes so that the pressure inside the reed chambers being equalised with that in the bellows, the reeds are thus effectively silenced and prevented from sounding, or the mutes may be faced with felt and hinged so as to close down directly on to the reeds.

By using this soundboard in conjunction with an "exhauster" as described for the American organ, the reeds can be sounded by suction instead of pressure wind, and in such cases it will not be necessary to depress the tongues of the reeds. The stop valves will be the same, except that in this case no secondary pallet is required.

When fixing the soundboards in position, sufficient space must be allowed between them to afford access to the reeds in the swell. It then remains to connect them with the keys by some simple form of action work, and it will considerably facilitate matters if both the manuals are made with centre-hung keys. Assuming that the pallets are on the underside of the soundboard, then for that shown in Fig. 13 a very simple movement for this action will be as illustrated in Fig. 29. It consists of a hardwood rod (A), termed a "sticker," in each end of which is a metal pin. The pin in the bottom end of the sticker passes through a small hole in the key tail, and that in the top end through a similar hole in the end of a short centred lever (B), termed a "backfall." These backfalls are about $\frac{7}{8}$in. wide, and $\frac{3}{16}$in. thick, and are centred in grooves cut across a thick bar of timber immediately beneath, and in line with each pallet, so that one end is directly under the pallet pull-down, and the opposite end over the key tail. Felt "cloths" or punch-

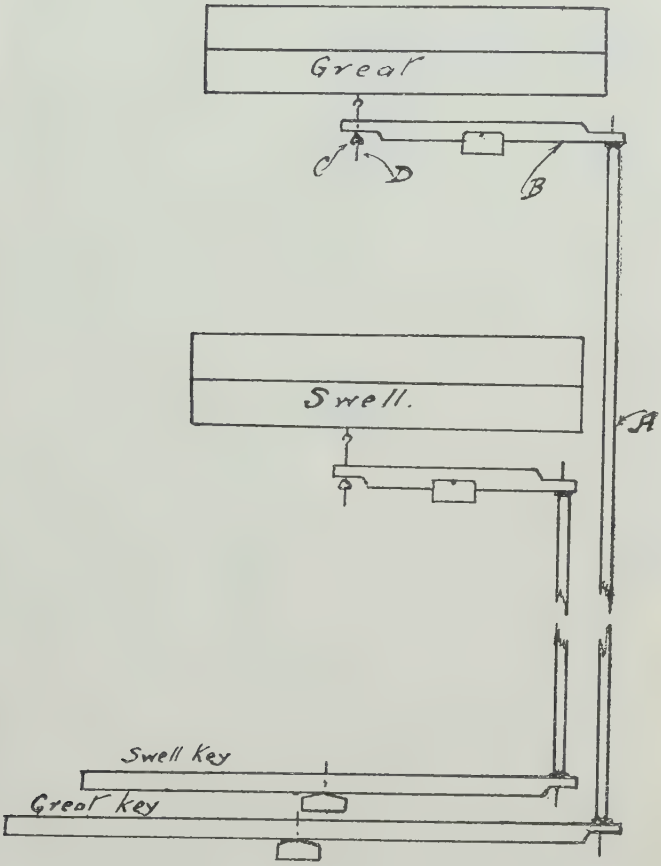

Fig. 29

SUGGESTED KEY ACTION FOR TWO-MANUAL REED ORGAN

ings are placed over the pins before the action is assembled, after which all slackness is taken up by adjusting the regulating buttons (C) on the tapped wires (D).

A similar type of action could be arranged for soundboards of the reed pan type as well as for the pallets working upon the underside of a reed organ cavity board, for which purpose brass wire pull-downs passing through the bottom of the windchest would be required to take the place of the wooden plungers by which these pallets are ordinarily worked.

The next matter requiring attention is the provision of an efficient swell for certain parts of the organ. In many reed organs and harmoniums (except for the expression stop of the latter) the so-called *forte* stops and knee swells make very little difference in the volume of tone, except by bringing on or shutting off the more powerful registers, whereas with a properly fitted swell box it should be possible to obtain a complete range of power from soft to loud.

For a two manual organ it is usual and necessary to enclose only the swell soundboard, or such reeds as are controlled by the top row of keys, although, of course, the great may be similarly treated if desired. With only a single keyboard it is desirable to place the whole of the registers inside the swell box.

The treble and bass *forte* drawstops in the average reed organ are attached direct to a long narrow strip of felt or leather covered wood which slides over an oblong opening in the covering board of the casework above the reeds. When the drawstop is pulled forward, this opening is uncovered. A better plan is to enclose the whole in a general swell, the use of which enables the player to obtain a gradual *crescendo* or *diminuendo* either by working a knee lever or foot pedal.

The best method of accomplishing this is to cover in the soundboard with a thick wooden box or chamber, the front or top of which is fitted with a number of moveable shutters pivotted so as to open like louvres. This box should be of wood not less than 1in. in thickness, and it is desirable that it be made neither

too small nor its top too close to the soundboard. It should be just large enough to cover the soundboard by about 12in. in height with the shutters (of which there may be five, each 2in. in width) the full length of the front. The shutters are bevelled to an angle of 45 degrees on both edges, which are then covered with strips of thick felt to make them soundproof and silent in closing. It is better for the shutters to open on the front rather than on the top of the box where they would be likely to project dirt and dust on to the soundboard.

The shutters may be worked either by a knee lever or foot pedal, the latter being placed sometimes in the centre over the pedal board, and sometimes considerably more to the right-hand side of the console. The swell shutters are then made self-

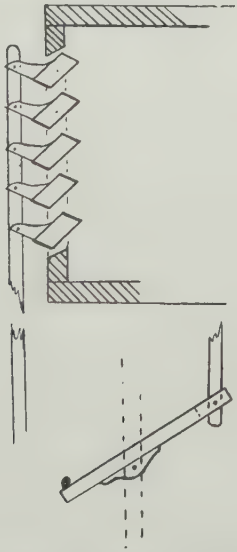

Figure 30. Section of Swell Shutters and Pedals

closing with an iron pedal projecting about 8in. beyond the casework with some simple means (such as a swinging notched rod) for keeping it down when the swell is required to remain open. Many organists, however, prefer what is termed a "balanced" swell, in which the iron pedal is replaced by a flat treadle about 12in. by 5in., centred so as to remain in any position in which it may be set by a light pressure of the foot.

It should be noted in passing, that balanced shutters are pivotted at the centre of their width, whereas in the self-closing type the pins are placed out of the centre, and nearer to the top edge, so as to close of their own weight or by the aid of a light spring. Fig. 30 shows a section of the shutters with pedal connections.

THE PEDAL ORGAN

TO the builder of a chamber organ, the provision of a separate pedal organ with its accompanying soundboard, action work, and somewhat cumbersome pedal board, is generally a matter for some consideration. There can, however, be no possible doubt as to the advisability of its inclusion, inasmuch as only by its presence is legitimate organ music possible. Nor is it too much to say that no organ is complete without it.

Although there are no absolute standard measurements in connection with the pedal board, certain generally accepted rules call for attention if we would follow pipe organ practice. Before going further, it will be as well to settle what form the proposed pedal organ is to take. A set of pedal keys will, of course, be required, but these do not always necessarily operate reeds of their own, being sometimes made to simply bring on the lowest notes on the manuals. Sometimes only one or two octaves are thus acted upon, whilst the pedal keys (particularly

in some makes of Continental organs) are usually short and straight, and rarely of a pattern recognised as anything like standard in this country. It is undesirable therefore to follow such methods, and the only proper plan (except, perhaps, in very small organs) is to provide a separate soundboard with one or more complete rows of reeds.

The recognised full compass of the pedal organ for a five octave CC instrument is thirty-two notes,—i.e., from CCC 16ft. to G. The majority of pedal keyboards are, however, of thirty notes,—from CCC to F, and for all general requirements this range is sufficient, the pedal board likewise occupying considerably less floor space.

Pedal boards are of two kinds, "straight" or parallel, and "radiating," the former being usually flat, and the latter concave. Fig. 31 illustrates, in plan and section, a concave and radiating pedal board (a type which has now practically superseded all others) of usual dimensions, these being as follows. The exterior part of the key E E is 27in. long, and for the purpose of all other measurements is to be considered the centre of the thirty note pedal board, also being the only key set at right angles to the front of the console. The radius of radiation (C D) is 12ft. 6in., and the radius of concavity (E F) 8ft. 6in., both of which measurements are taken from the common base point (marked with an x) in the centre of the middle key E E, and in line with the front of the D D sharp. The naturals are spaced $2\frac{3}{8}$in. centre to centre on the radius line C D. The raised keys or "sharps" are all of equal length,—viz., $5\frac{1}{2}$in., and stand above the level of the adjacent naturals 2in. at the back, sloping down to $1\frac{1}{2}$in. at the front. All the keys radiate equally from the 12ft. 6in. base point, and the back of the pedal board is the part nearest the organ front.

The framework of the pedal board consists of the front and back sills formed from two bars of deal or pine, on the top surface of which the curve of concavity is worked in accordance with the above measurements. The ends of the sills are

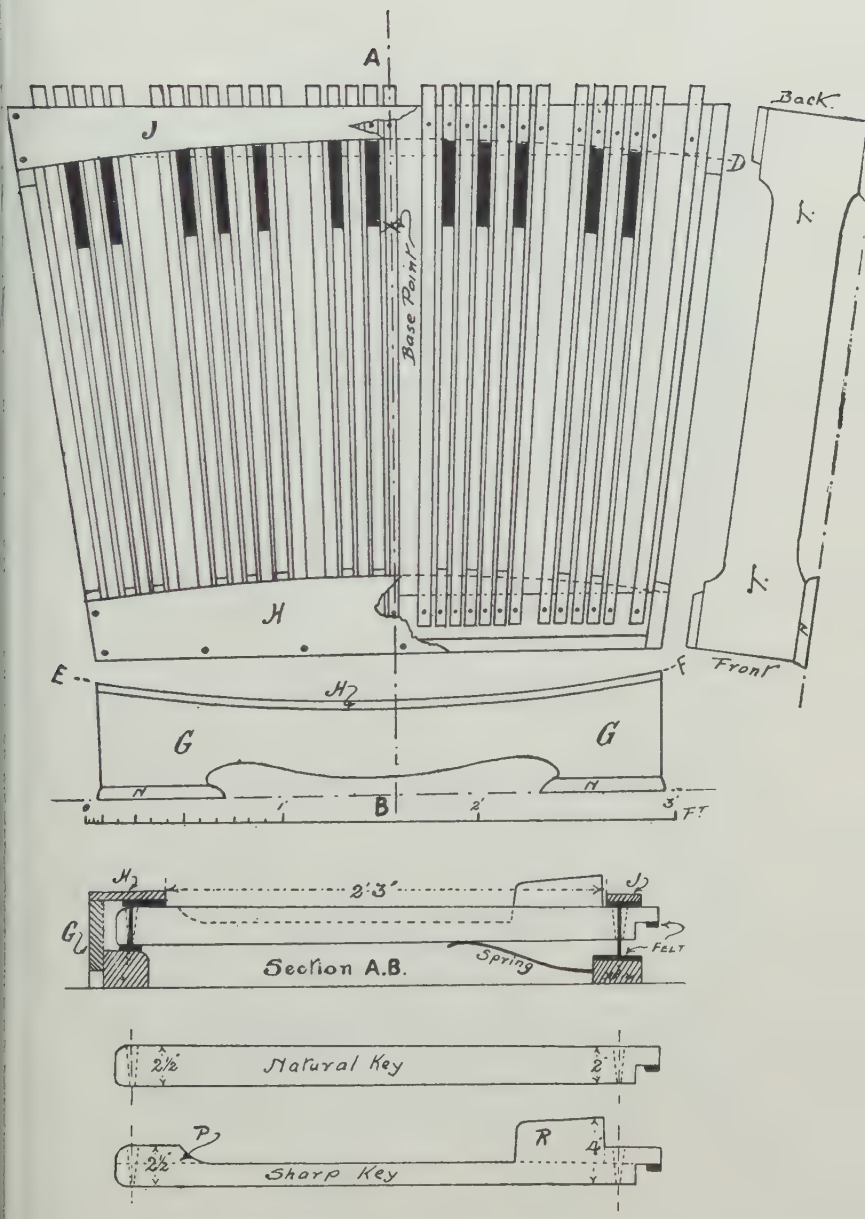

Figure 31. PLAN AND SECTION OF CONCAVE RADIATING PEDAL BOARD

morticed into the sides which should be of $\frac{7}{8}$in. oak or other hard wood, shaped as shown in the drawing. The keys are either of oak or birch, finished $\frac{13}{16}$in. thick, and are kept in position in the frame by a $\frac{1}{4}$in. iron pin working in a mortice at the head and tail of the key, each pin being set at a right angle to the curve of the sill, and with thick felt interposed between the working parts to ensure silent action. The drawing is to scale, and shows the difference in the shape of the naturals and sharps and all the parts, so that no difficulty should be experienced in fitting them together. It will be noted that there is a steel spring under each key, which must be strong enough to return the keys to rest smartly, and yet allow them to be quite easily pressed down. Fig. 32 represents an enlarged view of the mortice in the pedal key tail, the purpose of the large hole being to reduce friction at the pin.

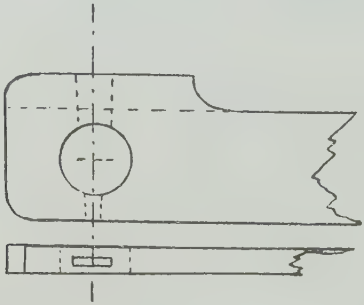

Figure 32. Enlarged View of Mortice in Pedal Key

If for some reason a full-sized pedal board is too large, a considerable amount of space may be saved by making the keys shorter, say 20in. for the centre key E E instead of 27in. as shown in the section A B, Fig. 31, but this alteration in length must be made by moving in the front sill, which will accordingly

require to be longer so as to preserve the correct line of radiation for each key. The pedal board can be made removable when the organ is not in use, so that the builder can, to a certain extent, use his own discretion as to the length he will make the keys. Too short a key gives an unpleasant action, and the spacing should on no account be altered.

The reed cells for the pedal organ on suction wind are similar to those of the manuals, and a usual type for pressure wind is illustrated in Fig. 33. This soundboard being comparatively short, can be placed in the back part of the case in some convenient position either above or below the bellows, the former being perhaps the best. The drawing shows provision for two stops, one of 16ft. and one of 8ft. pitch, and, for the two manual in hand, this will probably be sufficient. The action for working the pedal organ pallets is very simple, but must be carefully made so as to act without rattling. It is shown in Fig. 33, where the nose of the pedal key by pressing down the arm of the square (3) draws forward the tracker (2), another square continuing the movement by a second tracker up to the stem of the pallet (1).

Before setting out this action, the position of the pedal board must be fixed in relation to the manuals. Some organists prefer the C under the C, others the D under C. As it places the pedal board in a more central position, we will adopt the latter course, proceeding as follows. Drop a plumb line from the centre of the front of middle C on the great organ manual, so that it falls exactly in the centre of the D D pedal key. Another plumb line from the front of the *sharps* of the same keyboard should fall 4in. in front of the pedal bass point (marked X in Fig. 31), when the E E pedal key is at right angles with the front of the console.

Manual to Pedal Couplers

In addition to sounding their own reeds, the pedal keys are connected by couplers to the lowest thirty or thirty-two keys of

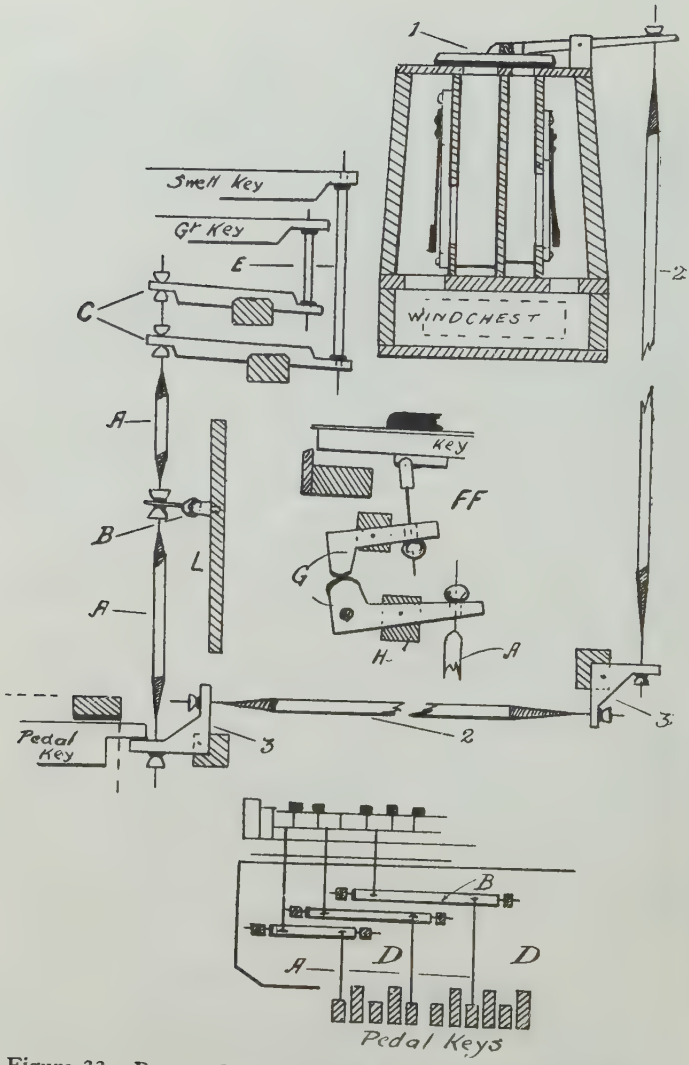

Figure 33. PEDAL SOUNDBOARD ACTION AND COUPLERS.

each manual (termed "great to pedal" and "swell to pedal," respectively), so that depressing any key on the pedal board also takes down a corresponding key on the manuals for which the coupler is drawn. Fig. 33 shows two different ways of setting up the manual-to-pedal couplers. As the spacing of the keys on the pedal board is so much wider than on the manuals, it is necessary to transmit the motion of the pedal keys laterally, and this is accomplished by a series of rollers, each having two arms, one of which is immediately above the pedal key, and the other in line with the corresponding manual key, a separate roller thus being required for each note. The rollers are all set out on a wide board (termed a roller board or frame), fixed to the framework of the organ, and work on iron pins centred in "studs" made from small blocks of hard wood glued to the roller board. (These studs, as well as the tracker wires, leather buttons and other parts can be purchased at any of the supply houses.) A thin wood rod or "tracker" (A) fitted with a tapped wire at each end connects the square (3) with one arm of the roller (B), a similar tracker connecting the arm at the other end of the same roller with the front end of the backfalls (C), so that although in the drawing it appears as though both trackers are attached to the same roller arm, it is, in reality, as shown in the front elevation D D, Fig. 33. (Elevation D D is not intended as a working drawing, but to illustrate the principle.)

The backfalls (C) are centred in a beam of wood about 2½in. square, termed a "backfall beam," and each beam with its thirty backfalls constitutes a coupler which can be used independently of the other. The ends of the beam are fitted into guides in which they rise and fall about ½in., so that when the drawstop is pushed in the beam falls and throws the short "stickers" (E) at the tail end of the backfalls out of gear with the manual keys. The various wires of the action, and the holes in which they work must be long and large enough to permit of this adjustment. In setting out this type of manual-to-pedal coupler, allowance

must be made for the greater depth of touch in the pedal keys to allow for which the centre pins of the backfalls are placed about two-thirds of the length from the front.

The second type of manual-to-pedal coupler illustrated at (F F) Fig. 33, is one to be found in a well known make of reed organ, and is rather less complicated in construction than the backfall action. It will be noticed that the mechanism instead of pushing up the key tail as in the backfall action, draws down the front of the manual key through the agency of the short rocking levers (G), which are in turn pulled down by the trackers (A). A roller board as previously described is also required for this action.

As illustrated, the coupler is in the "on" position, and is thrown out of action by dropping the beam (H) about ½in. The rounded edge of the rocking arms is faced with sheepskin leather to secure silent working, and a large hole in the tail end gives the tracker wires plenty of play so they do not bind when the beam falls. The bottom row of rockers are also made to overbalance at the front end by inserting a small piece of key lead.

For a two manual organ, this type of coupler is not so good as the backfalls, because it can only be applied to the bottom row of keys, and also because a certain portion of the mechanism being attached to the key is always working whether the coupler is on or not.

Both types of action are regulated by leather buttons screwed on to tapped wires at each end of the tracker rods where (the ends of the rods having been first brought to a point) the wires are half embedded in a shallow groove, and then tightly bound on with thick thread, which is afterwards varnished.

COUPLERS, &c.

FOR the purpose of increasing the resources of the organ, it is usual to fit a number of mechanical stops, collectively known as "couplers." In addition to the couplers ordinarily found in the pipe organ there are a number of accessory movements which are peculiar to the reed organ, and as they are purely mechanical, a short description of them will be included under this head.

Sub-bass

Reed organs without a pedal unit are sometimes fitted with a bass stop consisting of thirteen reeds of 16ft. tone. The cells for these reeds are generally placed at the back of the main cavity boards where their own pallets are worked from the keyboards by some simple form of coupler. The mechanism is controlled by a drawstop labelled "sub-bass," one very usual form being illustrated in Fig. 34. It will be seen that upon pressing

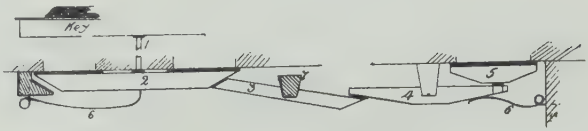

Figure 34. ACTION FOR SUB-BASS

down the key, the pitman rod or plunger (1) pushes down the main pallet (2), thus pressing down the centred backfall (3). This backfall continues the movement by tipping up the tail of the jack (4) to the opposite end of which is hinged the sub-bass pallet (5). When the key is released, the action is returned, and the pallets closed by the two light steel springs (6). As this sub-bass is not always required to be in use, the backfalls (3) are centred in a rising and falling beam or stock (7) so that when the drawstop is pushed in, this beam falls just enough to throw the whole of this additional mechanism out of gear. To make the action silent, all working parts should be protected by a film of sheepskin leather glued over points of contact. Although the sub-bass frequently consists of only thirteen notes it is a much better plan to continue it through the full pedal compass of thirty or thirty-two notes, as otherwise the thirteenth note, tenor C, is repeatedly doubled.

The Octave Coupler

Octave couplers are of two kinds: (1) those which bring on the octave *above*, and (2) the octave *below* the unison, termed, respectively, the super and sub-octave couplers. Both these stops are more frequently found in the American organ than in the harmonium. Fig. 35 shows this coupler in plan and section, from which it will be seen to consist of a series of metal rods, each end of which is bent to an angle, and flattened into the form of an arm or tongue. These rods, generally of $\frac{3}{16}$in. steel wire, are of such length as to bring the two arms under the centre

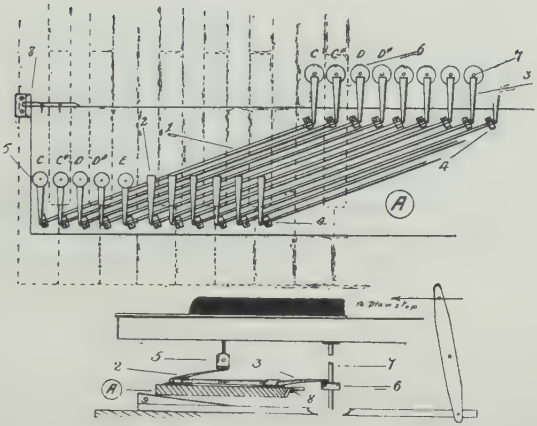

Figure 35. OCTAVE COUPLER

of each thirteenth key, and are hinged by a small metal clip at each end so they lie at an angle across the width of a board about 4in. wide placed beneath the front of the keys. The drawing represents the *super-octave* coupler, and it will be noticed that it is worked by the front arm (2) being pressed down by the adjustable stud (5) which is fitted on a screw under the front of the key, the other arm (3) meanwhile bearing upon a felt covered collar (6) glued upon the pitman rod (7) of the thirteenth note above. Thus, each coupler rod becomes a lever transmitting its motion laterally, so that when the coupler is in action, each key depressed also takes down its octave. For a *sub-octave* coupler, the wires would be bent and mounted in the opposite direction, or if made as illustrated, the front arm could be made to bear upon the top of the stud under the key front, receiving its motion from the back arm being pressed down by the collar on the pitman rod. To put this coupler out of action, the board (A) is hinged to the key frame (8), so that by a sliding wedge shaped

ram (9) operated by a draw-stop, the front edge of the coupler board may be raised or lowered sufficiently to put the arms out of reach of the plungers. This useful addition can be fitted to any reed organ, as the coupler with all the necessary studs, collars for the pitman rods, &c., can be had quite cheaply in a number of different types.

Octave couplers should always run through the compass, and not, as is so often the case, be divided with three octaves in the treble coupled *up*, and two octaves in the bass coupled *down*, thus leaving the centre of the keyboard hopelessly overbalanced.

Swell to Great Unison

This coupler is only required in instruments with two or more manuals. There are several different methods of making it, one of which is shown in the drawing, Fig. 36. It consists of a

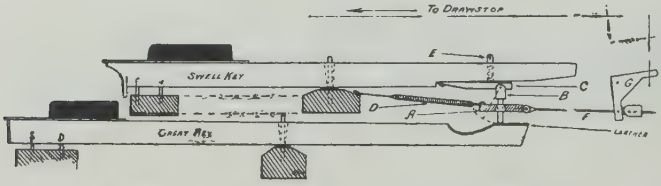

Figure 36. Swell to Great Coupler

narrow strip of hardwood (A) about ½in. thick, and 1½in. wide, running between the whole length of the keyboards, and bored with a line of bushed holes (one under each key) in which the short plungers (B) work quite easily. Each plunger is pivotted to a short strip of wood (C) screwed by one end to the underside of the swell keytail, so that it can be regulated by the screw (E).

The drawing shows the coupler in the "on" position. When the drawstop (which works through the square (G) is pushed in,

the spring (D) draws the whole line of plungers forward, at the same time tilting them slightly, as shown by the dotted line. Their bottom ends are thus brought over the cut out portion of the great keytail, in which position they are no longer able to fill the space between the keytails. Another method commonly used for the same purpose is called a "ram" coupler, and consists of a bar in which lozenge shaped pieces of wood are hinged. The bar is made to slide backwards and forwards, each keytail being fitted with a felt-covered incline which engages the lozenges when the coupler is in action.

Grand Jeu

This stop is to be found only in the harmonium, where it fulfils the purpose of a composition action, its use being to bring on all the stops for full organ. It is illustrated in Fig. 37 from which the working will be at once understood. It consists of a metal roller working in centres upon the top of the reed pan, and having a number of curved arms, each of which is placed so as to bear upon the hinged stages which work the stop plungers. It will be noted, however, that (unlike the others) the arm of the "grand jeu" stop is *underneath* its stage, so that when that stop is drawn forward it depresses the arm, and causes the roller to partly revolve, bringing the remaining arms down upon any stages of which the stops are not already drawn. This movement is arranged to work either from a drawstop, knee lever, or foot pedal placed between the blower treadles and worked by the heel. The arm (A) shows the connection for the two last.

A similar stop in the American organ is labelled "full organ," or sometimes bass and treble *forte*, in which case the stop mutes are operated by the coupler through long slotted trace rods which, whilst bringing on the whole of the registers, yet allows them to be individually controlled by their own drawstops.

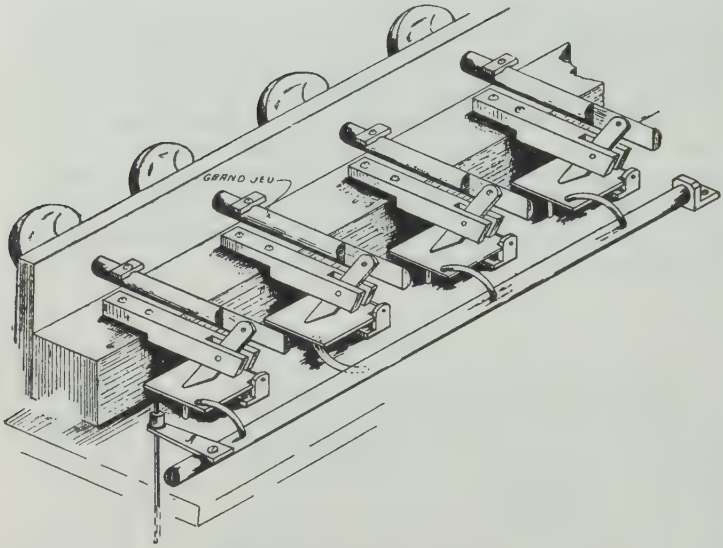

Figure 37. GRAND JEU

This coupler is also frequently operated by a knee lever controlled by a spring which puts the coupler "off" when pressure on the lever is removed.

The Prolongment

There are two distinct types of harmonium prolongment, although both are designed to create a "pedal point" by causing any bass notes struck to remain down for as long as required, although the finger may be withdrawn. Fig. 38 shows how this is accomplished. In (A) a light iron roller (1) extends under as many notes in the bass as it is required to operate (usually one octave), and this roller is fitted with short metal arms carrying a

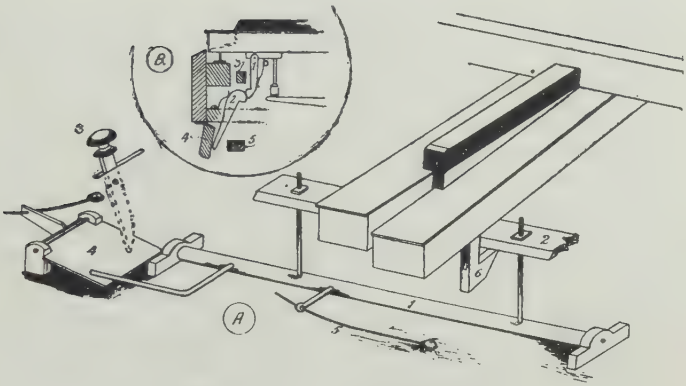

Figure 38. PROLONGMENT

strip of wood (2), the front edge of which is bevelled. The controlling lever (3) is centred, and works in a slot in the casework by the side of the key-cheek, so that its pointed end is in a position to bear upon the hinged stage (4). When this stage is pressed down, it allows the roller, by pressure of the light spring (5), to turn so as to bring the bevelled edge of the wooden strip just enough forward to engage the hook shaped catch (6) on the underside of the keys. When a key is depressed, this catch, being a fixture, pushes the strip (2) back sufficiently to let its point pass below the edge of the strip, which immediately springs forward again and prevents the key rising. When another key is put down, however, the strip is again pushed back, and the first key is released, but the second remains down, and so on, until the lever (3) is pushed over, and the stage allowed to rise and turn the roller too far back for the hooks to engage. Type B differs considerably both in construction and action. The keys are fitted with a hinged catch (1) (at the lower end of which is a notch) controlled by a light steel spring. Immediately in front of the lower end of this catch is a movable jack (2) also

provided with a notch and similar spring. The row of catches and jacks can be severally moved by the two padded rails (3) and (4), which extend the whole length of the movement. In the drawing, the mechanism is shown in the off position, but when required the rail (4) can be moved forward by a lever, and by pressing upon the tails of the jacks brings them into a more upright position against the stop (5), so raising the lip of the notch enough to engage the catches when necessary. Any key or keys which are then pressed down remain down, although the finger may be withdrawn, and to release these held notes, a knee lever presses the bar (3) forward, and this disengages the catches from the jacks. If desired, after a note has been pressed down and held, the pressure bar (4) may be released so that the jacks of any notes not already held spring back into the off position. Other keys can then be played in the ordinary way, whilst those put down previous to the release of the bar still remain sounding until finally released by (3) as above.

The Percussion Action

The percussion action is only found in the harmonium, and consists of a set of small felted hammers, something similar to those of the piano, and so placed that immediately the keys are depressed, the hammers strike the reed tongues. Fig. 39 shows this mechanism in detail, the movement being as follows. As the key falls the plunger (1) is pushed down (it is kept in line by a pin working in a slot at its lower end) and takes with it the jack (2). A leather covered notch in the jack engages the toe of the hammer butt (3) which thus rises until released and strikes the reed tongue, escapement being effected by the pressure of the "set off" (4) upon the tail of the jack. The hammer (5) then falls to its original position ready for the movement to be repeated. The action is put off by a drawstop raising the rail (6) which by pressing back the jacks prevents them engaging the

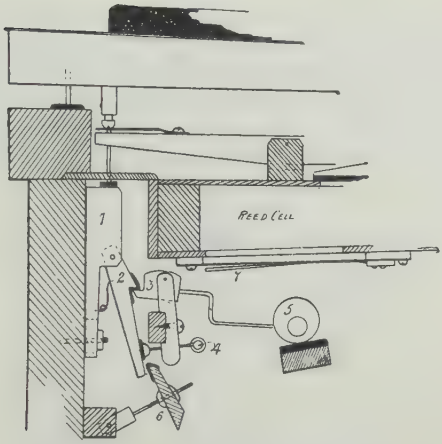

Figure 39. PERCUSSION ACTION

hammer butts. The percussion acts throughout upon the front set of diapason reeds, and striking them at the instant compressed air from the bellows is admitted to them gives prompter speech.

The Sourdine

A very small valve controlled by a drawstop and admitting wind from the bellows to a half row of bass reeds (at the same time shutting off the full wind supply to such reeds) causing them to sound with greatly decreased power. A similar stop in the American organ, usually labelled "Dolce," fulfils the same purpose by opening the stop mutes just enough to allow the reeds to sound quietly.

Vox Humana and Tremulant

The tremulant or tremolo of the harmonium is a small bellows or motor enclosed in one of the stop chambers, and supplied

with wind direct from the bellows through a small valve controlled by a drawstop. This motor is usually about 3in. by 1in., and in its top is an oblong aperture closed by a hinged and leather-faced cover-board which is prevented from opening more than a certain distance by a short tape. A section of it is shown at (A) Fig. 40. Wind is admitted from the bellows to this motor

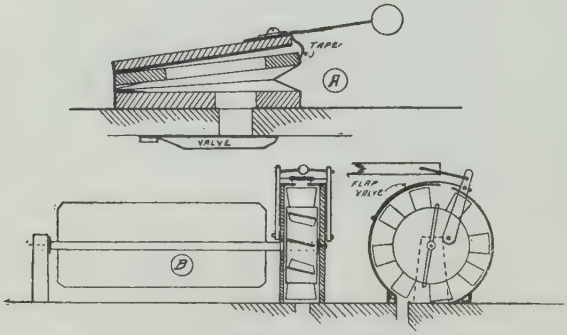

Figure 40. (A) Harmonium Tremulant
(B) American Organ Vox Humana

forcing it to rise, and when open to its full extent the top cover is further raised as far as allowed by the tape, partly by its own momentum (helped by the small weight on the steel wire), and partly by the pressure of the wind inside the motor. The opening in the top is thus momentarily uncovered and allows the wind to escape suddenly so that the motor is instantly collapsed, and the top falling with it again closes the opening. The rapid repetition of this movement causes an undulating or wavy effect.

The vox humana of the American organ is a rather more elaborate piece of apparatus. It is illustrated at (B), Fig. 40, and consists of a cardboard fan about 4in. wide fixed upon a wooden spindle, at one end of which is a small wind motor enclosed in a wood and zinc case. The vanes of this motor are

set at an angle, so that when a stream of wind is drawn by the exhauster through the opening in the top of the case, the motor wheel revolves, and rapidly turning the fan agitates the wind drawn through the reed cells. When the drawstop is pushed in, a strip of flexible leather is drawn over and closes the wind supply hole in the casing. The fan gives the best effect when enclosed in a confined space, and it is, therefore, generally in the swell with the back organ reeds. Neither type is very easy to regulate, and consequently the tremulant usually works much too fast.

* * * * *

In addition to the foregoing mechanical appliances there are one or two other movements sometimes found in the reed organ. The *Double Expression* of the harmonium is one of these, and is the invention of V. Mustel of Paris. It consists of an arrangement of valves in the bellows controlled by two knee levers by means of which, when desired, the power of the bass and treble can be governed independently, thus giving greatly improved facilities for expression.

The *Double Touch* is also a movement applied to the harmonium, its purpose being to cause the reeds of the back organ to sound an instant before those of the front organ, the latter being brought on by a deeper depression of the keys.

A description of the manual to pedal couplers "swell-to-pedal" and "great-to-pedal" will be found in the chapter dealing with the pedal organ.

REED VOICING AND REGULATING

THE art of reed voicing is one calling for a great deal of patient perseverance, and the cultivation of a well trained ear. The real barrier confronting the tyro is the difficulty of obtaining facilities for putting the known rules into practice, and without such opportunity, all the theory in the world will not give the dexterity of hand possessed by the highly skilled professional. It is not so much the getting of a single note to sound, as to obtain an equal power, and a given quality of tone, throughout the range of an entire register. In building an organ, it will, perhaps, be as well, and save possible disappointment, to obtain all the reeds ready voiced and tuned. At the same time, there is much usefulness in knowing how it may be accomplished, particularly in the case of a professional tuner wishing to replace one or two damaged notes, and as there is no royal road to success, other than perseverance, what has been done by one may be equally well done by another. For those who wish to try their hand, the following points may be of some interest.

The tools required are not very elaborate, all that are neces-

sary being a few small files, both half-round and flat with a safe edge, a half-round steel burnisher, a pair of small round-nosed pliers, a watchmaker's hammer, a small scraper or penknife of good steel with a keen edge, a reed hook, a block of ebony or polished steel, and a steel reed slip for tuning.

Organ reeds are of two distinct classes,—harmonium or Continental, for pressure wind, and the American pattern used for suction wind, the former having a broad, thick and more or less flat tongue or vibrator, and the latter a narrower, thinner, and much more curved tongue set in a frame less than half the thickness of the harmonium reed. The American pattern are altogether smaller note for note. It is this difference in the construction which has so marked an influence on the quality of their respective tone. For comparison the plan and side elevation of the following reeds are shown in Fig. 41.

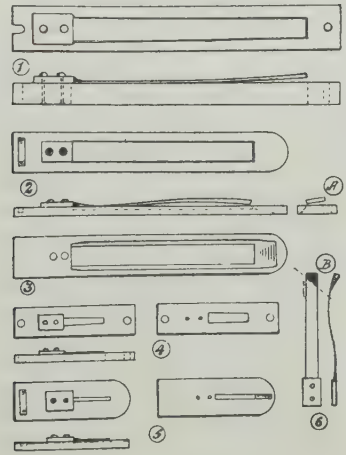

Figure 41. Reeds

(1) CC 8ft. cor anglais, harmonium; (2) CC 8ft. diapason, American organ; (3) reverse side of American organ reed frame; (4) top C of cor anglais, and reverse side of frame; (5) top C

of American organ diapason, and reverse side of frame; (6) twist of American organ reed tongue.

The pitch, power and timbre of the note depend upon the length, thickness and scale of the tongue and the voicing, so that whereas the deepest bass note of a stop may be 3¼in. long, the top note in the treble may be less than ½in., and from ½in. or more in width down to less than $\frac{1}{16}$in. But whereas the length (in so far as applied to unloaded tongues) remains practically constant for a given pitch, the "scale," or width in proportion to length, may be varied considerably for different stops, according to the quality of tone desired, and the fancy of the maker. In this, reeds follow the same law as organ pipes, the pitch being governed by length; power, or intensity by breadth and scale. Reeds of wide scale (other factors being consistent), therefore give a bold, full and round tone inclined to slowness of speech, and reeds of narrow scale, keen, brilliant, and more strident tone with quick speech. Heavy or low wind pressure makes no perceptible difference in the pitch of the note, but has a marked influence on the timbre, and is the controlling agent in regard to power or intensity. Reeds should, therefore, always be voiced for the wind pressure on which they are to be used, and the tone is enormously improved when they are well regulated so as to sound easily without being exerted to their fullest extent. The wind pressure of the average harmonium is generally about 2in. when the expression stop is not in use.

The rule that pitch is dependent on length is to be understood to apply to tongues of uniform thickness, and to the radius of gyration or vibrating length. For a tongue of this description it would be necessary to allow about ½in. per foot tone, so that a vibrator sounding the note CC 8ft. tone would be about 4in. long, with an extra piece for fixing to the frame or block. In practice, however, this rule is very much modified owing to the fact that by loading the tongue, or by materially increasing the thickness of the metal itself, more especially towards the tip, the velocity of vibration may be slowed to almost any reasonable degree, always provided, of course, that the body of the tongue is of sufficient substance to support the weight without lateral vibration. Thus by fixing a lead weight of 94 grains to its tip, the pitch of the previously unloaded 8ft. reed, shown in Fig. 41, was reduced from C C to its octave below. For this reason, the tongues of the low notes necessitating large reeds are seldom if

ever, made a natural length, but are always more or less loaded, so that these deep tones may be obtained from altogether smaller reeds than would otherwise be possible. (See Fig. 42.)

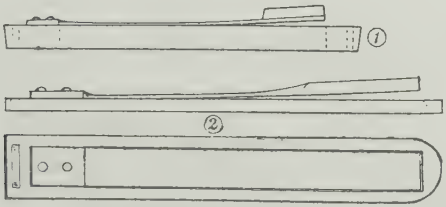

Figure 42. (1) 16ft. Bourdon Harmonium
(2) CCC 16ft. Pedal Reed Double Diapason (American Organ)

In addition to length, thickness of tongue also influences the pitch for the reason that given equal length, a tongue of uniform thickness will vibrate faster than a loaded one, and pitch being dependent on the number of vibrations made by the tongue in a given space of time it follows that the loaded tongue must produce a lower note than an unweighted one of equal length. If this were not so, it would be impossible to tune the reeds. This can be demonstrated by fixing a small square of felt to the tip of an ordinary reed and noting the difference before and after.

It is, of course, understood that without wind a musical sound is not given by the tongue itself, which simply acts as a regulator for imparting a series of rhythmical vibrations or impulses to a column of pressure wind passing between the tongue and the aperture it covers. A reed with a resonating body (such as the cell in the cavity board) will, therefore, give a better note than one without, and many inventions or ideas have been put forward with a view to obtaining richer and more imitative pipe-like tones from reeds by this means.

The majority of these appliances take the form of resonating tubes or chambers for amplifying the vibrations and controlling the harmonics of the tongue. Scribner's and Dickson's qualifying tubes are a case in point as being a series of either vertical

or horizontal pinewood tubes or pipes usually applied to the diapason row and ranging from about 2ft. to 2in. in length. In the treble one pipe is made to serve six, and in the bass, two reeds. Another and similar idea applied to the American organ, and known under the name of "Humanola," consists of an extra range of cells in the cavity board very similar to, and immediately above the ordinary reed cells, and communicating with them by an aperture in the roof of the reed cells. The stop mutes acted upon the front of these resonating cells or chambers through which the wind had to pass on its way to the reeds.

In the Vocalion and Orchestrelle organs the resonance chambers consist of metal tubes or pipes, each of which fits into a hole leading into its respective reed cell, there being one pipe for each note in the stop to which it is applied.

These matters are mentioned here, not because they can be rightly set down as part of the actual business of reed voicing, but to show that the tone can be influenced in other ways than by manipulating the tongue. Free reeds, however, are naturally very rich in overtones owing to the presence of the higher dissonant upper partials, and it is the so far unsolved difficulty of entirely eliminating these excessive overtones or harmonics from the prime or foundation tone which makes it impossible to get an exact reproduction of true pipe tone from reeds.

At the same time, there is no reason why the tone of the completed organ should not be full and round, rather than thin and harsh as is so frequently heard, and to attain this desirable end the reeds must be generously scaled.

So called pipe tone demands the use of wide scales; certain stops of the diapason class being all the better if made nearly as much as a quarter their length in width. Scale, however, is not everything, and the tongues must be properly treated in other ways to get certain results. In its original state the vibrator consists of a thin, hard, springy brass strip, at one end of which is left a small piece of stouter metal, whereby it is fixed in its frame or block. This is termed the "heel," the opposite end being the "tip" or "toe."

The lowest notes in the bass of the harmonium are frequently fitted with tongues to which a small lead weight is soldered to the tip (see Fig. 42, CC 16ft. harmonium bourdon). Usually these weighted tongues extend over the first five or six notes in the 16ft. stop, that of the C C being about $\frac{3}{8}$in. long by about

$\frac{1}{8}$in. thick, and the remainder gradually smaller as the scale ascends. After these first few notes the tongues are themselves thickened towards the tip for the next octave or more, and the stop thence completed with reeds having tongues which gradually get thinner towards the tip.

In plan, the vibrators may be of equal width throughout their length, and in the American organ generally are so, but harmonium reeds are more often made a fraction wider at the heel so as to gently taper towards the tip, both in tongue and aperture,—at all events for the bolder toned or foundation reeds (see No. 1, Fig. 41). This does not apply to such stops as are intended to give a thin reedy tone, which are made with long narrow tongues considerably curved away from the frame at the tip. Thus, whereas an oboe reed may be of practically uniform thickness, and considerably curved above its frame at the tip, a flute reed of exactly the same proportions will be nearly straight and flush with its frame, but filed off to almost a feather edge at the tip.

8ft. reed stops are rarely loaded with separate weights, the metal at the tip of the lowest notes being considerably thickened instead. The same remark applies to reed organ vibrators, which are always made so that the requisite thickness of metal is left in the tongue itself.

All filing must be carefully done so as to leave the edges square, and the metal unkinked or dented, as it will be impossible to get a good note, or possibly any note at all, from a kinked tongue.

Having prepared the tongue, it will be found that in its perfectly flat state it is difficult to make it sound except, perhaps, on a very high wind pressure, and the tongues are therefore always slightly curved from heel to tip, so as to raise the latter slightly above the face of the frame. Reeds which are only very slightly curved are generally loud and harsh, whereas by developing the curve, a softer and fuller tone is secured.

At the same time, the articulation or promptness with which the reed begins to sound is slowed down by this curving, and if carried to excess, a point is reached when it will refuse to sound at all. Between these extremes, commencing with the perfectly flat tongue refusing to sound, there is a certain point of correct adjustment through a series of curves that in the end become too great and again produce silence. This applies to practically every process in reed voicing.

The vibrators used for suction wind are generally curved a good deal more than harmonium reeds (as may be seen by comparing Nos. 1 and 2 in Fig. 41), partly owing to their being mounted in an entirely different kind of frame, and partly because they are made of a softer and more flexible type of metal.

The finished tongue is fixed to a frame or block stamped from stout brass. In the harmonium, these frames may be as much as $\frac{1}{4}$in. thick for the bass notes, down to $\frac{1}{16}$in. in the treble. American organ reed frames are much thinner, seldom being more than $\frac{3}{32}$in. in either bass or treble, they are also differently shaped, as will be explained presently. Harmonium reeds are screwed to the soundboard, and much can be done to prevent harshness of tone by interposing a film of sheepskin leather between the reed frame and the soundboard before screwing down. American organ reeds fit tightly into grooves provided for them in the cavity board, and the firmer the frames fit, the better and bolder the tone. One great difference between the harmonium and American organ frames is that whereas the former are made with an aperture which is left the full thickness of the metal, the latter is milled out on the underside, so that the sides of the aperture are cut away until the inside top edge of the frame is scarcely thicker than the tongue itself. This dishing or spooning of the frame (shown in No. 3, Fig. 41) allows the wind to get hold of the tongue more quickly, with a corresponding quickening in its speech. But it also causes the tongue to vibrate through a much smaller arc, because the force of the suction becomes exhausted as soon as the tongue passes below the dished side of the frame. (Reeds always begin to vibrate from above the frame.) As a result, the tone is smooth and round, though less powerful than if the frame were left plain. In some harmoniums the reeds are not fitted into separate frames, the apertures being cut in larger brass plates, with six or eight tongues to one plate, and these plates are of thinner metal than the single frames.

The aperture in the reed frame must be perfectly straight, and the metal smooth, any roughness tending to destroy the proper sounding of the note. The tongues are always practically the same size as the frame opening, and the degree of accuracy with which they fit without actually touching the prompter the speech, though the tone is inclined to be hard. With a looser or wider fit between the edges of the tongue and

the frame, especially at the tip, this hardness disappears and the quality of the note improves accordingly, but at the same time its speech is made slower. Here, again, a point of correctness must be attained between too close a fit, in which the tongue will chatter against the metal of the block, and too loose a fit, when instead of a musical sound we get a mere rush of wind.

To obtain good quality tone with prompt speech it is therefore necessary to effect a compromise, and this can be done by fitting the tongue closely, particularly at the heel, and afterwards giving the extreme tip a decided twist at one corner, as shown at B No. 6, Fig. 41. By this means, the lateral vibration of the tongue is considerably checked, with a corresponding smoothness of tone, the close fit in the major portion of the tongue at the same time giving the required promptness of speech. It may be noted that the fit of the American organ reeds is not so close as in the harmonium, the difference being about two to one. By increasing the twist or dip at tip of the tongue, the tone becomes still more mellow.

It is a difficult matter to describe on paper exactly how the purely mechanical part of reed voicing is to be carried out. Shortly, it consists of curving and setting the tongue to a correct degree in relation to the face of its frame, bearing in mind the before mentioned rules, but it will be readily appreciated that there are a large number of possible conditions between perfection and failure, and it is here experience tells. Anyone wishing to take up reed voicing will, therefore, do well to begin by obtaining a few well voiced examples from various stops, and by careful comparison note their chief points of difference. Both types of reed can be purchased complete, and fitted in the block, either unvoiced, or voiced and tuned; singly or in sets; or the unmounted tongues, in sizes, may be bought by the dozen.

The next operation is to impart to the flat tongue the amount of curvature previously decided upon, and different voicers have different methods of getting this curve. Some start with the burnisher and finish with round-nosed pliers, while others rely almost entirely upon the burnisher. An unvoiced vibrator already mounted on its block will, naturally, require a different treatment to an unmounted tongue. Taking a fair-sized sample of the latter, a start may be made by clamping the flat tongue by the heel, face side up, on to the ebony block, then taking the

burnisher in the right hand, it is gently stroked along the tongue from heel to toe, with a slightly increased pressure near the centre of the stroke, when it will be found that the metal soon assumes a gradual curve. The correctness of this curve can only be judged by experience and repeated trial. If the curve is to be simply left the segment of an arc from heel to toe, as in some large harmonium reeds, it can be finished with the burnisher, but if it is required to dip or bend towards the tip, it must be unclamped, turned over and the burnishing proceeded with nearer the tip, or it may be finished with the pliers, in which case great care must be taken not to raise a kink in the tongue. The nearest description for the completed curve is a gradual and very slight concave from heel to the centre, and thence a somewhat more pronounced convex curve or slant towards the toe. See No. 2, Fig. 41.

When judged to be correct, the tongue is to be fitted to its frame, where it is fastened by a couple of small brass rivets through the heel piece, and this rivetting cannot be too tightly done or a chattering of the tongue will result. To test the curve, press the tongue down lightly into its aperture in the frame, when, if correct, the *upper surface* near the heel, and the *under surface* towards the tip, will be level with the face of the frame, the extreme tip being a trifle below the dished out edge of the American organ frame. If this is not so, a piece of watch spring must be gently slipped under the tongue, between it and the frame, and careful bending resorted to until the position is right. Then, holding the reed in the left hand with the tip facing towards the operator, the tip of the tongue is taken between the pliers at a slight angle (as shown at the dotted line at B, No. 6, Fig. 41), and the tongue twisted upon itself, and the left hand corner bent down more or less sharply, so that when fully depressed into its opening, there is a slightly triangular shaped space between the tip and the frame. (See A, No. 2, Fig. 41.) As the reeds become smaller in the treble, less curve and twist are required, whilst the smallest are left practically straight. (See Nos. 4 and 5, Fig. 41).

The tongue must be mounted quite centrally in its frame, and when depressed must fit closely along the sides, particularly at the heel, and yet be perfectly free to vibrate without chattering. For this reason, and because it makes for increased stiffness with a consequent lessening of lateral vibration, the tongues are

nearly always made to taper slightly in plan, from toe to heel.

Even at this stage our troubles are scarcely at an end, for the tongue must stand above the frame to a correct degree. For instance, it will be slow or silent on light wind pressure if too far above the frame, and equally so on heavy pressure if too near. If low in the frame, it will be too soft, and if high, too loud, so that considerable patience is required to get it just right.

If the tongue is already mounted in its block, a different method of voicing must be used. In this case, the watch spring must be slipped betwixt tongue and frame, and pliers and fingers used to obtain the required curvature, every care being taken not to kink the tongue.

Generally speaking there is far too little difference in the quality of the various stops in the average commercial reed organ, a deficiency which can be overcome by more careful scaling and voicing. These scales should be worked out from the diapason, which is the standard or foundation of all organ tone whether reed or pipe. The quality of tone obtainable from reeds may be classed under four distinct sub-headings, as follows :—

(1)	Diapason.	Diapason, Melodia
(2)	Flute.	Flute, Stopt Diapason, Gedackt, &c.
(3)	String.	Gamba, Violin, Viola, &c.
(4)	Reed.	Horn, Oboe, Trumpet, &c.

all of which have two features,—i.e., "Timbre" and "Power."

Timbre is influenced by length, scale, shape and curvature of the tongue, as for instance, flat tongue, strong tone ; curved tongue, mellow tone ; tongue long and narrow, reedy thin tone ; wide in proportion to length, full broad tone. Shape and construction of the reed cell.

Power or intensity is influenced by scale, thickness, shape of the block or frame ; fit of the tongue, and its relative position in the frame ; whether high or low, being loud if high, and soft if low ; raising the tongue also tends to flatten, and lowering it to sharpen the pitch. The curvature of the tongue. Wind pressure.

Timbre is understood to signify the characteristic tone colour of recognised qualities of organ tone, by which the various registers may be distinguished one from another. Power or intensity of sound is very closely allied with timbre, because it must be regulated in accordance with such accepted qualities of

organ tone. Thus, "dulciana" immediately conveys to mind a soft tranquil tone possessing slight keenness, inclined to slow speech. In the same way, "diapason" stands for bold, sonorous, and plump tone of considerable power. "Gamba" for thin, keen and brightly penetrating tone, and so on. Power is also largely a matter of proportion because that which would be too loud for a small room, would, in a large hall, not be loud enough. Thus the whole art of voicing lies in giving to each register not only its characteristic quality, but also the right proportion of power most suited to maintain a correct balance.

Granted it is difficult to obtain these distinctive qualities from reeds, it is, nevertheless, most desirable that the effort be made if the organ is to live up to its drawstop nomenclature, and not degenerate into a meaningless jumble of indefinable character.

Finally, each stop must be placed in the organ, and gone over most carefully until there is perfect equality, evenness of tone, and promptness of speech throughout, when the reeds are ready to be fine tuned, it being, of course, understood that the whole of the mechanism is in complete working order, and that the reeds have already been approximately set to pitch.

TUNING

BEFORE the organ can be properly tuned, it is necessary to prepare a scale or, as it is termed, "lay the bearings," by distributing over a single C to C octave the twelve equal semitones as required by the laws of equal temperament. It is unnecessary here to enter into a discussion on intervals and beats, because anyone not already acquainted therewith can learn all about them from one of the many books on the subject. Suffice it to say, that in preparing this master octave, all the *fourths* must be tempered,—i.e., made slightly sharp or wider than perfect, and the *fifths* slightly flat or narrow. All octaves are tuned perfect or "pure."

The only tools required are two or three short strips of flat watch spring or a steel reed slip for slipping under the tongues, and a straight bladed penknife or scraper with a *sharp* edge, the tuning being accomplished by scraping the surface of the tongue at the heel to flatten, and at the tip to sharpen. Care is required in carrying out this operation, as metal once removed cannot be replaced, and loss of metal spells alteration of tone. With the small reeds especially the merest scratch means all the difference between in or out of tune, and the tongues are always more sensitive to treatment at the root than at the tip.

The bearings are always laid on the diapason or similar 8ft. set of reeds, generally beginning on mid. C, which should first be set to pitch by tuning fork,—C 517 Continental or normal pitch being the best, although most of the older harmoniums will be found to average between C 545 to C 530.

Whilst tuning is going on the room should be kept at as even a temperature as possible, and the bellows maintained at about half pressure. Then the middle C having been tuned to exact pitch, proceed as follows, tuning each black note a shade (two beats) flat, but keeping the octave pure:—

PITCH. TEST.

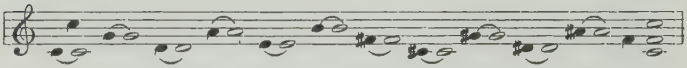

Having completed and carefully tested the bearings, and being satisfied that they cannot be improved, the remainder of the stop may be tuned in perfect octaves, taking care that each note so tuned sounds pleasantly with its fourth and fifth, after which the remaining stops may be tuned from it, each being gone through, and tested upon itself.

4ft. stops, of course, sound the octave above, and 16ft. stops an octave below the unison pitch. Occasionally 32ft. stops (two octaves below) are met with, but unless very carefully voiced these large reeds are slow, especially in the bottom octave, the lowest note CCCC (see Fig. 42) making only about sixteen vibrations per second. 2ft. stops sound two octaves above the unison, and should not be too shrill. It will sometimes be found that these very small reeds refuse to speak on high wind pressure, as for instance when the expression stop is in use. An almost certain cure is to drill a small hole—not more than $\frac{1}{16}$in.—near the tip.

If any difficulty be experienced in deciding whether a note is either flat or sharp with the note to which it is being tuned, allow its key to rise slowly, which will have the effect of slightly flattening it as the key rises. If already sharp, it will thus come into tune, showing that it requires to be flattened. Some tuners experience a difficulty in listening to the deep bass notes, and rather than spoil a reed, a good plan is to gum a small piece of

felt on the tip, which by slowing the vibrations will soon show which way the tuning ought to go.

If a reed be inadvertently made too sharp by over-tuning it may be brought back to pitch by fixing to the tip a scrap of Chatterton's compound, or a tiny bit of felt, or if the reed is large enough, a small blob of solder will be better as there is no danger of its falling off.

In many organs will be found a stop labelled "Celeste," consisting of a half-set of reeds, usually commencing at E or mid. C, and tuned a trifle sharp so as to beat when used with another stop of similar intonation. To get the right effect, the beats or waves should not be too fast,—the correct amount being about three beats per second on C^1, gradually increasing as the pitch ascends. Sometimes the celeste is tuned flat to the in-tune rank, but is then not so brilliant as when tuned sharp.

It will be appreciated that to fine tune an organ of any size is a job requiring considerable skill, and a large amount of patience, particularly in a harmonium where the heavy pan must be turned over each time an alteration is made. It is one, however, which should on no account be scamped, otherwise the natural dissonant qualities of the reed tongue are accentuated with the result that the general tone of the organ becomes disagreeable and harsh.

FAULTS AND THEIR REMEDIES

As the repair of any make of reed organ is not a difficult matter to anyone able to use a few tools properly, it is hoped that the following notes may be of service to those not already initiated into the whys and wherefores of reed organ defects. In the first place, it is usually quite half the battle to be able to find where the trouble lies, and I shall therefore endeavour to show the cause as well as the repair.

The average reed organ is pretty long suffering, and generally its derangement is the result of neglect, bad usage, or damp, and therefore if the life of the instrument is to be prolonged, care should be taken, particularly in schools and halls used for the congregation of large numbers of people, to see that some discrimination is used in selecting a place in which the organ is to stand. Dust, dirt, and mice, are some of the most frequent causes of trouble, and as prevention is better than cure, it is a good plan to provide a low wooden platform for the organ to stand on, and a well fitting dust cover to put over it when not in use. It is not good either for the case or interior "works" for it to stand in a place where the sun can shine upon it, nor should it be near a stove, radiator or draughty ventilator. When

not in use the drawstops should be pushed in, and the lid closed *and locked* to prevent unauthorised persons tampering with the keys. The expression stop should be left drawn, so that should anyone work the foot treadles, the wind can escape without bursting the bellows.

Repairs, &c.

Before any repairs can be made, it is necessary to know how to get at the interior, for which purpose (taking the harmonium first) proceed as follows. Upon raising the fall, it will be found that the lid folds back in two parts, and is attached to the back of the case by two or three brass hinges, the centre pins of which may be withdrawn, and the whole lid lifted clear of the case. This discloses a wooden frame, the panels of which are backed with silk or other material to prevent dust falling into the interior without deadening the tone. In some types this cover is replaced by swell shutters. When this is lifted out, the drawstop rods with their connections are exposed, together with the cover board bearing the mutes of the treble and bass *fortes*. At each end of this cover board will be found one or, perhaps, two long screws which must next be withdrawn, after which the stop board with the drawstops and their connections may be removed from the case, thereby uncovering the keyrails and frame, and the small metal stages working the stop plungers. If the hand is run along under the lock rail of the case work immediately below the front of the keys, a small snatch hook will be found at each end, and upon these being released it will be possible to raise the keyboard on its hinges, by which it is attached to the top of the reed pan. If it is desired to entirely remove the key frame, these hinges must be unscrewed, when the whole may be lifted out. The key frame and keys having been removed, the top of the reed pan with the pallets and their jacks, &c., are laid bare, and at the back, close to the casework, will be seen two long hooks, upon the release of which the reed pan may be turned up from back to front upon two swivel plates screwed to the front of the case. By turning the reed pan right over the whole of the reeds are exposed, as well as the top of the bellows board with its stop valves and other parts. Before this bellows board can be removed to get at the interior of the wind-

chest, it will be necessary to take out the screws holding the swivel plates of the reed pan, which can then be lifted clear of the case, leaving only the bellows and feeders therein. To remove the bellows board take out the series of screws which will be found holding it to the sides of the windchest, and, having lifted it clear, the leather valves over the wind trunks, and the expression stop, will be seen in the windchest, and also the stop valves attached to the underside of the bellows board. It now only remains to remove the back board from the case (in some makes this is made up with solid wood panels, and in others is just a frame covered with baize), and we have dismantled as much as is possible without taking out the bellows. As the bellows are generally more or less built into the case it may require some trouble to get them out.

To open up the American organ for inspection, it will be necessary to begin by taking out the various round-headed screws holding the top part of the case, which may then be removed out of the way. In some of the better makes this may not be necessary owing to the provision of hinged or otherwise removable panels, and the following notes must be read as only generally applicable, as there are so many different types all having slight differences of manufacture. In the ordinary way, however, the withdrawal of visible screws will enable the following parts to be lifted clear: top, back, music-desk, fall board over keys, lock-rail, and key-blocks. Sometimes the front panels below the keyboards are also removable, but more often are fixtures built into the case.

These parts being removed exposes the drawstop frame with the stop rods and traces connecting the stop mutes and the vox humana fan, sub-bass, &c., these latter being removable by unscrewing. After disconnecting the various wires, traces and other movable parts, the stop board or frame may be lifted clear by taking out screws which will be found at each end. The key frame lies underneath the stop board, and is fastened in place by long screws, generally beneath the middle and the two end keys, which must first be removed by unscrewing the back catch and releasing the key tails. Sometimes the key frame is secured by a couple of dowels, and a metal catch at each end. The keys can, of course, be separately or collectively removed (apart from the frame) by first taking out the back catch. Immediately under the keys will be found the coupler board (if any),

and this can be removed by taking out the screws holding its pivots to the frame at each end. This leaves the cavity board with its rows of plungers standing above its top, as well as disclosing the stop mutes which, upon being raised, give access to the reeds. It is usually quite unnecessary to remove all these parts if it is simply desired to examine the reeds, as the cells holding the front stops can generally be seen by removing the lock rail from below the front of the keys (usually fastened by two round-headed screws at each end), or those in the back organ by taking out the back of the case.

To get at the pallets it will be necessary to open the air chest (if there is a swell box over the whole or part of the cavity board it must first be removed) by taking out the whole of the screws holding the chest down to the bellows board. The screws at the back and sides will be found on top, but those at the front are usually put in from underneath. When all these screws are removed, the top or soundboard, with its cavity boards, may be lifted clear. The pallets will then be seen mounted upon the underside of the soundboard, and also the wind apertures from the exhauster reservoir.

To remove the bellows or exhauster from the case (as is frequently necessary when renewing defective webbing from the blower), the screws holding the middle board must be withdrawn from the bellows table by first opening up the windchest as has been described, after which other screws fastening the middle board of the exhauster to the sides or bottom of the case may be taken out, when, after disconnecting the blower webbing, the whole of the bellows may be removed. When replacing, care must be taken to see that the leather-faced joints between the top edges of the reservoir and the underside of the bellows table make a perfectly airtight fit.

Being thus able to inspect all the parts, the next point is to ascertain in what way they may be faulty, and the manner in which such faults may be rectified. As nothing can be done unless the wind generator is in perfect condition we will start with

The Bellows

Bellows may refuse to act properly from one or more of the following causes. The ribs and other wooden parts of the har-

monium bellows are usually joined together (or, as it is termed, "leathered") with a specially prepared brand of white sheepskin which is cut into strips about 1in. wide, and glued over the folds between the ribs. With constant use over a period of years, leathering becomes perished and porous, and finally cracks along the folds, so allowing the wind to escape. Such defects when not otherwise immediately apparent, disclose themselves by unsightly black markings on the white surface of the leather, and where faulty bellows are suspected, such markings should be looked for along the folds. The "gussets" or large pieces of leather covering in the corners of the ribs may be cracked, torn, or eaten into by mice,—similar defects are to be found in the feeders, which, indeed, are generally the first to show signs of wear. To make repairs, the old leather must first be completely removed where damaged, so as to leave the surface of the wood perfectly clean. New sheepskin is then cut into strips the same width as that removed, and its edges having first been brought to a feather edge, good hot glue is brushed over the soft side. The glue having been allowed just slightly to chill, the leather is then laid in position, and well rubbed down with a rag wrung out in hot water. To repair the gussets, the old leather should be carefully stripped in one piece if possible, and this can be used as a pattern for cutting the new leather.

For all bellows repairs use what is known as "strained" sheepskin, and always glue the soft and not the "grain" surface. Where the leather is required to overlap, the surface of the underneath skin must first be well roughed with fine glasspaper, otherwise the glue will not hold.

Bellows may be defective owing to faulty valves, either in the feeders or the reservoir, and as very few are provided with removable panels, it will be necessary to open the bellows to get at the valves. To test for defective feeder valves, slowly work the feeder, meanwhile holding the hand near the valve holes in feeder board, and any escape of wind will at once be apparent when the feeder rises. If these valves appear to be in order, possibly the reservoir valves are wrong. To test for this, work the blower so as to get some wind into the reservoir, then, with the feeders at rest insert a finger or short stick into one of the valve holes in the feeder board. If the reservoir valve is defective, there will be a rush of wind through the propped up valve in the feeder. Test each feeder in turn, and when quite sure the

fault is located, open up the leathering at the nearest point giving access to the valve, afterwards replacing the outer leather with new.

Bellows valves may be faulty either owing to the leather being torn, curled, or becoming hard through age and so not closing its valve properly. In some valves the leather is in fairly large pieces covering a group of holes: in others, short, narrow strips cover a row of three or four holes only. The former are either tacked or held down by a short strap piece at each corner, one of which may become detached and allow the leather to fold back on itself. Small valve leathers are usually thicker in substance, and glued by one edge along the line of holes, as in the case of the valves over the wind trunks of the harmonium. In putting in new valves the soft side of the leather should always face the holes.

The exhauster and two lifters of the reed organ bellows are generally covered with a rubber cloth, known as "tosh." It should be of the best quality, and not some inferior substitute which soon cracks. In the reed organ, defects in the generator are apparent through general weakness of tone, and an inability to maintain a proper vacuum in the exhauster. The action of this type has already been explained, from which it will be remembered that when at rest the reservoir is extended by "gape" springs, sometimes fitted outside, but more often inside. These V springs are made to give from 4lb. to 32lb. pressure, and by them the suction force is regulated. The reservoir usually has two springs of 18lb. tension; exhausters two springs of 9lb. each. The springs may be broken, displaced, or slightly fractured, thereby no longer exerting their proper force with consequent loss of power. Test each lifter separately, and the difference in the ease with which they may be closed will show whether the springs are all right. To replace defective inside springs, the tosh must be stripped from the woodwork sufficiently to allow the new spring to be set up.

If the tosh is much worn in the folds, it must be carefully stripped off with a damp cloth and hot iron, and used as a pattern for cutting new material which is then glued on after thoroughly cleaning off all the old glue. In fixing new tosh, sufficient width should be used to allow the reservoir to expand at least 7in. or 8in. Small holes or a tear may be repaired by affixing a disc of rubber cloth with cycle tyre cement, the part surrounding the hole being

first well cleaned with benzine. The valves are on the outside of their respective boards, and are similar to those already described, and liable to suffer from the same defects.

To discover a small leak in the bellows, or to ascertain whether a leak is in the bellows or windchest, remove the top of the windchest, and gum a piece of paper over, or otherwise temporarily block up the "suckers" or openings in the bellows table communicating with the reservoir. Then pump the air out of the reservoir by the exhausters, and if the leak is in the bellows they will quickly fill out, whereas if they do not fill out it may be taken for granted that the leak is in the windchest. Leakage may be caused through an imperfect fit between the reservoir and underside of the bellows table.

In some reed organs, a valve or "ventil" is fitted inside the top of the reservoirs, and serves a similar purpose to the expression stop of the harmonium by cutting off the wind to the reservoir, and so bringing the reeds into direct communication with the exhausters. Where such a valve is found, it should be looked to in order to see that it is working properly, and that none of its connections are broken.

Another cause of bellows failure, both in the harmonium and reed organ may be due to splitting or cracks in the bellows table or some part of the windchest, any of which must be found and made good. In the harmonium, see that the reed pan beds down equally upon the wad, likewise the divisions between the registers. See that the wad itself is in good condition, and not moth eaten so as to be little more than a hollow tube. If doubtful, replace it with new. Also see that the catch hooks of the reed pan fit properly: that the hinges or the screws of the reed pan are neither strained nor loose. Assuming that the bellows are now in good working order we can proceed to test for further defects.

Noise Accompanying the Working of the Bellows

If upon working the foot treadles a squeaking noise is heard, it may arise from defective hinges to the treadles, or they may require oiling; the axles of the rockers or the short trace rods connecting them to the feeders may need lubricating, the former with machine oil, and the latter with a mixture of tallow and blacklead. The webbing connections may creak against the

woodwork of the treadles or the rockers, the remedy for which is a little tallow smeared on the woodwork. If the squeakings continue with the treadles at rest, but with the reservoir full of wind, it is probably due to the leathering of the bellows. To cure this rub dry French chalk well into the leather along the folds and across the centre of the gussets. Treat the leathering of the feeders in a similar manner. Look to the hinge of the feeders, the leathering of which may be too tight, causing them to be hinge-bound, though this defect ought not to appear if the feeders have been properly covered.

In the American organ lubricate the small rollers over which the webbing passes from the lifters to the treadles, and blacklead the surface of the rollers themselves. Replace any worn webbing with new. Ascertain whether the safety or relief pallet is working properly when the bellows are fully inflated, and whether windtight when not in action. The bellows and blower action should be absolutely silent in working, and if not, the cause must be found and rectified.

Keys Sticking, Rattling, &c.

The keys may stick down from being slightly warped, causing them to chafe against one another, or bind upon the front guide pins, or the mortice may be swollen with damp or the felt bushing worked loose. The wooden bead holding the keytails (termed the "back-catch") may be warped, loose, or affected by damp, in which case it must be eased to allow the keys to work easily. The lock rail may be warped and press on the front of the keys.

In centre hung keys the centre mortice may be shrunk, and so nip the pin; or if bushed (as it should be) the bushing may be too tight and require easing. For single notes sticking here and there, try a pinch of French chalk on the bushing, or ease a trifle with a pair of key easing pliers, or by inserting the blunted end of something a little thicker than a pin. See that there is no dirt or candle grease wedged between the keys.

Keys will be noisy and rattle when the mortices or the bushing is worn, for which either rebush with new bushing cloth or make a small stab with the point of the knife or similar tool on each side of the pin to close in the mortice. If a whole set of keys be defective in this respect, the mortices not being suffici-

ently large to admit of bushing, the centre pins may be replaced with a larger size, preferably "bat" or oval pins, or the mortices may be broached out, and bushed with cloth.

The felt washers or "cloths" upon the front, centre, and back rails may be hard, worn out, or missing. Moths are very fond of these cloths, and a supply of baizes and punchings in various sizes and thicknesses should be kept to replace any that are defective. Sometimes one or two keys will be out of alignment, and so spoil the appearance of the keyboard, to remedy which they must be packed up with paper washers introduced on to the centre or front guide pins as required.

The appearance of old and worn ivory keys may be considerably improved by rubbing down to a level surface on a sheet of "flour" glass paper, and repolishing with a paste of whiting and methylated spirit on a piece of felt pinned upon a board, and finished with the methylated alone on a soft rubber. Celluloid keys are polished with rotten-stone and oil on a felt rubber, or with one of the preparations sold for the purpose. If the keys are very badly worn, it is best to re-ivory them. The plating is laid on in two parts, the "head" or front, and the "tail," both of which can be purchased in a number of sizes and thicknesses, new or old. First remove the worn plating, and after cleaning off the remains of the old glue, place the new ivories on a small shooting board, and with a steel-faced plane shoot the edges where the head and tail butt together. The head is to be glued on first, using white glue (which may be bought, or made by mixing powdered white lead with thin glue), and cramped in place with a small piece of warmed hard wood to prevent it curling. Then the tailpiece, having first driven in a small brad just short of its length behind it so as to bow the ivory up a little, and cramp down as before. When set, the joint should be practically invisible, and after rubbing down the whole surface and trimming off the edges, the ivory is repolished as above. When recovering keys with celluloid, the surface must first be softened with methylated spirit, and both it as well as ivory should be "toothed" or well roughed before the glue is put on.

Ivory which is discoloured and yellow can be bleached by covering it with a thick paste of whiting and alcohol left on for twenty - four hours.

Cyphering

A defect which often occurs at some time or other in most reed organs is termed "cyphering," or the unbidden sounding of a particular note or notes arising from the following causes:—

(1) Upon pressing down the key. In the American organ the cedar wood plungers may be warped, cracked, or swollen with damp, or the holes in the cavity board in which they work may be affected by damp so that the plungers stick fast. To ease, use a little French chalk, hard soap, or compo candle. If still tight rub them down a trifle with fine glass-paper, taking care to keep them round. The plungers or, as they are sometimes called, "pitman rods," should work easily, but not too loosely. In the harmonium, the pallet jacks may be warped; the screw under the key head press unduly on the jack, and consequently require turning in a little; or the centre pins of the jacks may be bent, broken, or missing. The springs may be weak, bent, or not bearing upon the jacks fairly.

(2) The cypher may occur without depressing the key. The pallet may be warped, the leathering hard or moth eaten, or possibly unglued. The pallet may be nipped between the guide pins, or the pins may have fallen out so that the pallet no longer covers its aperture fairly. Dust, dirt, chips, or a small screw may fall on the face of the pallet, and prevent it closing properly. The pallet spring may bear unevenly on the pallet, causing it to roll, or the spring may be broken, or if of brass the nature may have left the metal without enough resilience to overcome the weight of the key. The pallet may have jumped its guide pin through too heavy a blow on the key.

(3) The unbidden sounding of a series of notes will sometimes be heard whilst the organ is playing, although the stop to which the offending reeds belong is undrawn. This may arise from the mutes or stop valves not closing properly, either because the valve itself is warped or loose at its hinge. The leather facing may be worn, hard, or curled. Springs may be weak, bent, or not bearing properly. Dust or dirt may prevent one end of the mute or valve being quite airtight, although apparently in working order. When the mutes are hinged to the front of the cavity board by a strip of sheepskin, it is a common occurrence to find a thick layer of dirt collected in the fold of the hinge, pre-

venting the mute closing properly. The springs should then be released, and the mute raised enough to allow the face to be swept thoroughly clean, when in all probability the mute will operate perfectly. Test the mutes of stops which cypher by pressing with the fingers when the organ is sounding, and look for dust before doing anything with the mute itself. If, however, after cleaning, the mute still allows the reeds at one end or the other to cypher, it points to either weak springs or warped woodwork, to cure which the mute must be taken off, re-planed, and afterwards re-faced with new sheepskin. (The same applies to defective harmonium stop valves.) Examine also the trace rods and other stop connections, and if necessary adjust them so that they do not prevent the mutes or stop valves from working properly. Small reeds cypher very easily, often with the slightest leak, but providing the mutes fit as they should, there is no necessity to resort to bleeding the cell as is sometimes done to save trouble.

Runnings

It sometimes happens that a humming noise from a series of reeds will accompany the legitimate sounding of the organ. This defect is termed a "running," and is one of the most troublesome things to put right. A running may take the form of a few notes faintly heard along with adjacent ones sounding in any particular stop drawn, or similar sounds may proceed from a number of reeds of which the stop is not drawn. Though a running of this nature *may* be caused by a faulty mute or stop valve, it generally points to a defect in the cells of the cavity board or reed pan.

If the organ has been standing for a long period in a damp situation it is quite likely that the cells have become unglued from the soundboard, with the result that wind is able to pass from one cell to another. Similar damage to individual cells may be caused by carelessly forcing in the reeds frames, and so splitting the walls of the cells. Reed frames which are very tight should be rubbed along the edge with a piece of hard candle or beeswax, or a shaving may be taken off the metal, although they must on no account be a loose fit or they will be liable to chatter.

If upon examination the cells are found to be damaged, it

will be necessary to dismantle the cavity board and remove all the reeds near the break. With care it may then be possible to prise the cracks a trifle wider with a thin bladed knife, and after running in some thin hot glue the parts must be cramped together till dry, all traces of surplus glue then being removed. The same treatment applies to the cavities in the reed pan, but in this case they will have to be flooded by pouring in the glue, which after being allowed to run into the break is drained off, and the parts cramped together.

When very badly gone, the best plan is to entirely strip the cavity board from the soundboard, taking care not to break out any of the thin edges of the cell walls. This can usually be accomplished, after taking out all the reeds, by the aid of an old sharp dinner knife, although it will be appreciated that owing to the fragile nature of the reed cells it is a job wanting much care. The parts may then be reglued, every vestige of old glue being first neatly cleaned away, and cramped with a number of hand cramps till set. When dismantling the cavity board it will save trouble in replacing if all such parts as plungers, mutes, &c., are numbered.

Another defect which may give the appearance of a running, though not a very common one, is that the key frame may be slightly warped, causing an uneven pressure on the pallets at one or other end of the front organ, in which case the frame must be made level, and held by one or two extra screws, or if only very slight the plungers or regulating screws under the key heads may be either lengthened or shortened as required.

It is also possible for the octave coupler to bring on an unbidden sounding of a number of notes, either because it is not properly regulated, or by reason of its board warping or twisting, or because the small wooden collars on the pitman rods are not properly fitted. These faults *may* only show when the coupler is on, but it is also possible for it to do so when out of action. The coupler is regulated by the wood caps on the plunger screws under the key heads, for which purpose the caps are provided with a series of tiny holes into which the point of a fine bradawl is thrust to turn them. If, however, the coupler board is badly warped or twisted, it must be replaned or replaced with a new one to which the wires may be transferred, taking the opportunity to see that the metal clips, if bushed, are in good condition.

The Drawstop Action

When the stops are pushed in or drawn out, they should move easily and smoothly, and finish with a smart shock. There should be no give or spring, and the registers should come on or shut off instantly. If the rods work stiffly in the holes of the stop jamb, or squeak in the felt bushing thereof, they may be improved by a rubbing of hard compo-candle. In the harmonium, see that the centre pins connecting the stop rods to the metal levers are neither missing nor bent; that the ends of the rods are not split, nor the centre pin holes much worn, in which case the enlarged hole must be filled up with a glued wedge, and a fresh hole bored. See that the brass stages are working properly, and that their hinge pins are neither broken or bent. New ones can be purchased to pattern quite cheaply, so there is no need to fake up any that are not in good order. Lift up the stages and see that the metal or wood plungers which work the stop valves are not broken or missing. In turning the reed pan over, it is quite possible for these plungers to fall out, and in replacing to get into their wrong holes, so when this happens test them for length, as some are probably longer than others, and note whether they allow the stop levers to press the stages down far enough to open the stop valves sufficiently.

See that the frame carrying all the drawstops is properly screwed down at both ends, otherwise drawing the stops will raise it and tend to make them ineffective. Also look to the metal roller of the grand jeu, and see that the arms are neither broken or bent. If the stop valve action is visible when the reed pan is turned up, see that the metal arms are firmly fixed upon their respective rollers, and not bent; that the rollers themselves are not rusted or binding in their bearings, if they are, clean them with fine emery cloth, and oil the bearings. See that the metal bearings are in good condition, and firmly screwed on, and that the T shaped hammers on the valves are not broken or loose. Put a trace of grease on the metal parts where they rub together. Make sure the valve springs are tightly screwed to the bellows board and able to close the valve smartly, and grease their ends where they pass through the staple or eyelet in the valve. If the valves are sluggish or the leather hard, recover and put in a new spring. Examine the pilot valves, and ascertain if

they close properly when the stop valve is open, otherwise they will cause an escape of wind when the stop is drawn. If faulty, note whether the plunger working them is regulated to correct length; if the springs are in good condition, and not liable to jump out of the groove in the valve stem. If worked by a screw in the valve face, see that it does not foul the stop valve spring. Try the air passages from the pilot valves, and see that they are not blocked up. Examine the wad between the stop divisions, and also round the edge of the reed pan, and if anywhere defective replace with new.

In the American organ look to the cranked wires of the stop action: clean off all rust with fine emery cloth, and put a touch of oil on all the metal bearings. Look to the slotted ends of the trace rods as, being of unusually thin wood, they are liable to split,—if broken, replace with new ones. Ascertain if all centre pins are in good order, and replace any that are doubtful. Wood working against metal may be lubricated with a mixture of tallow and blacklead, or by rubbing with a piece of hard compo candle. Look to the leathering of the mute hinges. In some organs the mutes are put on with brass hinges in addition to the leather, and it will sometimes be found that the metal has corroded the leather, although without examination it will appear sound.

Clean the whole of the varnished wood work with a damp cloth, and where necessary give one or two coats of clear varnish or shellac.

In replacing the lock rail below the keys of the American organ, make sure the knee lever wires (which are usually attached thereto) are on the correct side of the blocks which engage them, and if the felting of these blocks is worn, replace with new.

Tremolo

Sometimes the vox humana fan will refuse to act, in which case the spindle may be swollen with damp, or it may be simply choked with old and dried grease, or one of the vanes may have become detached and touch the side of the case. If the fan continues to revolve after the drawstop is pushed in, it is due to the leather flap valve not shutting off the passage of the wind. A light spring or a stout rubber band put on so as to draw the leather flap tightly over its aperture will put this right.

The tremulant of the harmonium rarely requires attention, unless the small strap restraining the rise of the top be broken. The length of the cedar wood rod which opens its valve requires to be regulated to just the right length, so that the amount of wind passed is neither too great nor too little. The beat should be a little slow rather than fast, and may be regulated by altering the weight on its length of spring.

The Percussion Action

This seldom requires attention unless it be affected by damp, in which case any of the parts may temporarily bind through the centres becoming tight. In course of time it may be necessary to re-set off the escapement, which is done by turning the regulating screw (see No. 4, Fig. 39), so that the hammers fall immediately the reed has been struck. Occasionally one or other of the springs may break and require attention, or parts rubbing together may squeak or work sluggishly. A very soft lead pencil rubbed on will generally effect a cure; centre pins working in wood should on no account be oiled. If centres are tight they must be eased, first withdrawing the pin which may possibly be corroded or bent.

The Prolongment

This may now and then want one or two small adjustments, either because of broken or slack springs, or because the metal arms supporting the lock bar may be accidentally bent.

Faulty Sounding of Reeds

Although the mechanical part of the organ may be in perfect order it is possible that some of the notes may either sound in a very indifferent manner or, perhaps, be wholly silent, and if the action work is in good condition the fault must be looked for in the reeds.

Silent Reeds

If a reed is silent, it is probably dirty. Before it can be examined with any certainty, however, it must be removed from the soundboard. American organ reeds are withdrawn from the cavity board by raising the mute and drawing out the reed frame with a small tool termed a "reed hook," for the use of which the frames are provided with a small notch at the heel. Harmonium reeds may be unscrewed if necessary, though sometimes it is possible to effect the following cure without. Upon holding the reed up to the light it will probably be noticed that very small particles of dirt adhere between the sides of the tongue and frame. This obstruction prevents the tongue vibrating, and to to get rid of it either lightly tap the edge of the frame, or pass the thin edge of a piece of paper between the tongue and frame, taking care not to disturb the set of the tongue in any way. If tried on its wind now, the reed will probably speak its note without further treatment. Dust and dirt are the greatest enemies to the proper sounding of reeds, and as it is constantly being drawn through them from the bellows, it should be looked for and removed before the reed itself is in any way interfered with. The smaller reeds, especially of the 4ft. and 2ft. stops are usually the first to suffer.

A reed may also be silent from becoming bent, or not being set properly in its frame. If it sounds, but requires a very heavy pressure to make it do so, then the tongue is, in all probability, too far from its frame and should be very carefully pressed down near the heel with the burnisher until the toe of the tongue lies closer. If, on the other hand, the reed sounds only on a very light pressure, the tongue is too near and must be gently raised a fraction.

These alterations in set must be delicately carried out: on no account must the tongue be kinked or the curvature altered, or the reed may be irreparably ruined or its *timbre* completely changed. Compare the faulty reed with a perfect one in the same register, and note in what manner it differs. A reed too high or too low in its frame will also be either loud or soft, according to the degree it is at fault. If upon comparing the bad reed with a good one in the same register a difference is noticeable in the curvature, that which is defective may be altered

as follows. If curved too much down at the tip, place the knife blade under the tip of the tongue, and with the burnisher stroke the tongue from the heel towards the centre. If on the other hand the tip is already too high, place the knife under the centre of the tongue, and commence to stroke from there towards the tip. As before, these operations must be carried out with extreme care, and trials made till the right curve is attained.

A reed may also be silent from the tongue not fitting its aperture correctly. This may arise from the tongue being too narrow or not long enough, or because the tip has been bent down too far. In the latter case the remedy is obvious, but if the curvature is correct it will be necessary to remove the tongue from the frame and enlarge the rivet holes so that the tip of the tongue may be brought closer up to the end of the aperture; or the metal of the frame may be very slightly burred in towards the tip by gently tapping with a light hammer.

Chattering Reeds

Reeds sometimes chatter or rattle when sounding, a condition which may result from the tongue being twisted or fitting its frame badly. In large reeds this may be caused by the walls of the reed cell pinching in the sides of the frame, and to remedy this take a shaving oft the side of the metal, or the groove in the reed cell may be enlarged with a small flat file. To ascertain whether the fit of the tongue is correct hold the reed up to the light and gently press the tongue towards its aperture, and having noted where it touches, or appears to lie too close, carefully shave away a fraction of the metal from the inside of the frame with a sharp knife, but do not touch the tongue. The tongue may also have become slightly out of the straight with its aperture. To remedy this, a small cold chisel must be placed against the heel on the same side as that which hits the frame, when a smart blow from a hammer will probably set it straight. A large weighted reed will sometimes chatter owing to the metal of the tongue not being thick enough to withstand the weight of the loading at its tip, causing lateral vibration so that the weight knocks against the frame.

Chattering may also be due to the tongue not being properly and tightly rivetted at the heel, or the frame itself may not fit

the reed cell in the cavity board, or be screwed down to the reed pan.

When fixing reeds in the harmonium, it is usual to coat the underside of the reed frames with thin glue or copal varnish before screwing down, so as to make the junction windtight, and prevent chattering. Reeds intended to give a full round tone are also much improved by screwing on to leather, which also prevents chattering.

Another form of chattering may be due to sympathy between a certain reed and some metal fitting or other part of the organ. It may even arise from something quite apart from the instrument itself, such as the jarring of a curtain ring or glass in a bookcase door, &c., although at the time such vibrations may have every appearance of coming from the interior of the organ.

Reeds out of Tune

Reeds once properly fine tuned rarely get out of order sufficiently to require retouching with the knife. When odd notes here and there sound out of tune it is nearly always due to dirt or dust on the tongues; therefore before doing anything else, the reed should be thoroughly cleaned by soaking in methylated spirit or petrol for a few minutes, when the dirt will be easily removed with an old tooth brush leaving the metal bright again. But whereas the reeds thus cleaned were formerly out of tune from being flat to pitch, it will probably be found that they are now slightly sharp to the remainder of the stop, and this is because the other reeds also require cleaning. The only satisfactory plan then with dirty reeds is to remove and clean them all. It is a very simple matter to do, and the tone and tuning is thereby fully restored without further trouble. If, however, after cleaning a reed is still out of tune, it may have been slightly bent either by a blow of the percussion hammer, or by too great a wind pressure, or the pallet may not be opening to its full extent.

Reeds which have been handled in tuning must be allowed to regain their normal temperature before being judged as to pitch, the heat of the hand making them materially sharp for the time being.

When a reed goes violently flat or out of tune, it is most likely due to a small fracture in the metal near the heel, either

as the result of the metal being old and having lost its nature, or from too heavy a blow of the percussion hammer. Such a fracture may be invisible to the eye, but if suspected and the tongue be gently raised above the frame it will probably snap off short. A fractured reed can never be made to stand in tune and must be replaced with a new one. A sudden pressure on the blower, with the expression stop in, will sometimes fracture a vibrator.

Reeds are also liable to be thrown out of tune owing to dust carried into the reed cell, in which respect the harmonium is perhaps worse than the reed organ, as particles of dust are more likely to be drawn up from the floor into the bellows than collected from the atmosphere by suction wind.

In course of time (whether short or long, according to the atmospheric conditions) the metal of which the tongues are made undergoes chemical change. Brass is liable to corrode when exposed to damp or gassy fumes, with the result that in a comparatively short time the tongues become coated with verdigris, which if not removed eats into the metal. Thus, not only are the tongues put out of tune by the coating upon them, but sooner or later the metal loses its nature, becomes brittle and gradually weakens in recoiling or vibrating power.

DUE DATE

ML
597
.M5
1930

53,723

ML
597
.M5
1930

53,723

AUTHOR

Milne, H. F.

TITLE

CAMROSE LUTHERAN COLLEGE
LIBRARY

AUGUSTANA UNIVERSITY
1 1910 00023470 5

Outstanding Books on the Organ ure
Foundation . . .

On Reed Organs:

Bryant School of Piano Tuning
Tuning, Care and Repair of Reed and Pipe Organs
(reprint) $3.00

Michel, N. E.
Michel's Organ Atlas
(1969) 141 photos, 869 names of organ builders; $7.50

Sears, Roebuck and Co.
The Reed Organ. How to Give it the Proper Care.
(1910 Reprint) $2.00

On Pipe Organs:

Audsley, George Ashdown
The Art of Organ Building
(1905 Reprint). 2 vols. $20.00

Barnes, William Harrison
The Contemporary American Organ
(1964) $7.50

Foort, Reginald
The Cinema Organ
(1932 Reprint) $6.00

Irwin, Steven
Dictionary of Pipe Organ Stops
(1965) $7.00

Klotz, Hans
The Organ Handbook
(1969) $7.50

Miller, George L.
Recent Revolution in Organ Building
(1913 Reprint) $6.00

Norman, Herbert & H. John
The Organ Today
(1967) $7.50

Williams, Peter
The European Organ 1450–1850
(1966) $20.00

Wurlitzer Organ Co.
The Wurlitzer Unit Organ
(Reprint Catalogue) $4.50

Recordings:

Harrison, G. Donald
The American Classic Organ
12″ LP. Monaural $5.00

Biggs, E. Power
The Organ in Sight and Sound
12″ LP. Stereo + booklet $7.00

Send for our catalogue listing over 400 items on the subject.

THE ORGAN LITERATURE FOUNDATION
Braintree, Mass. 02184 (U. S. A.)